Birds OpenSource Webinar #12

MicroOrbiter-1 Satellite BUS System Overview

2022/12/07

Agenda

I. MicroOrbiter Inc. Introduction
II. MO-1 Team Introduction
III. Project Introduction
IV. Project Overview
V. Missions
VI. Subsystems

I. Who is MicroOrbiter Inc. ?

A Newly developed space startup who aims to use IoT communication satellites to access remote areas for various applications.

MicroOrbiter Inc. was established in Tokyo, on May 13, 2021 by Mr. Yoji HIRAKATA.

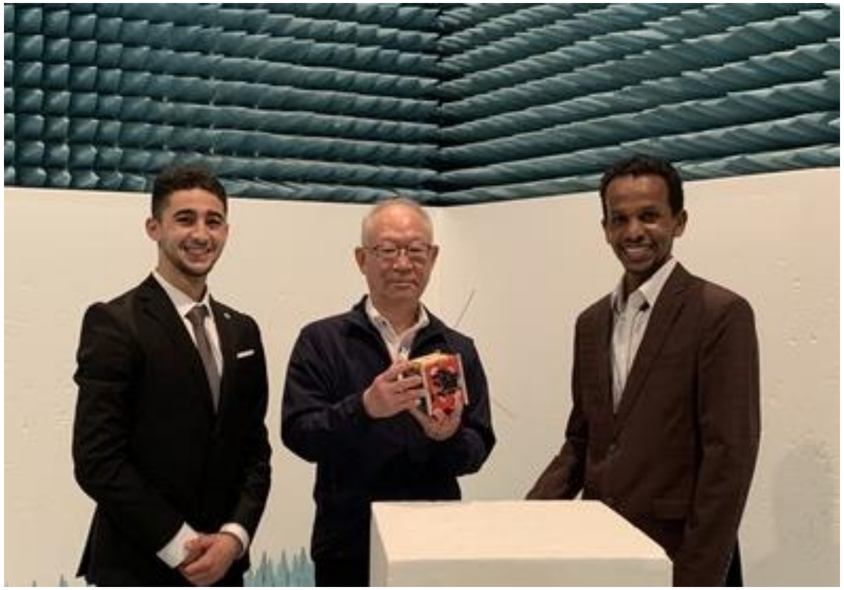

Left to Right : Moumni Fahd, CTO, Hirakata Yoji, CEO, Dr. Abbas Yasir, CDO

II. Who is the MicroOrbiter-1 team ?

The MicroOrbiter -1 team brings both MicroOrbiter Inc. members and Kyushu Institute of Technology students, staff members with the supervision of Prof. Cho.

From MicroOrbiter Inc :

Yoji Hirakata, CEO
Fahd Moumni, CTO
Dr. Yasir M.O. Abbas, CDO

From Kyutech :

Pr. Mengu Cho
Dr. Victor Hugo Schulz
Dr. Necmi Cihan Orger
Dr. Pooja Lepcha
Dr. Mark Angelo Purio
Dr. Maximilien Berthet
Fatima Duran
John Paul Almonte
Pema Zangmo
Giulio Mattei
Yudai Etsunaga
Hari Ram Shrestha
Eto Chinatsu

Acknowledgments also to :

KITSUNE Team
BIRDS-4 Team
BIRDS-5 Team
CURTIS Team
SPATIUM-II Team

From Kyutech

III. Project Introduction

Project Statement :

- MicroOrbiter-1 aims to demonstrate, the capability of MicroOrbiter Inc. to build CubeSats

Project Objective :

- MicroOrbiter-1 shall use the LoRa modulation to allow access to isolated areas in Japan with an IoT satellite

IV.Project Overview

System Block Diagram

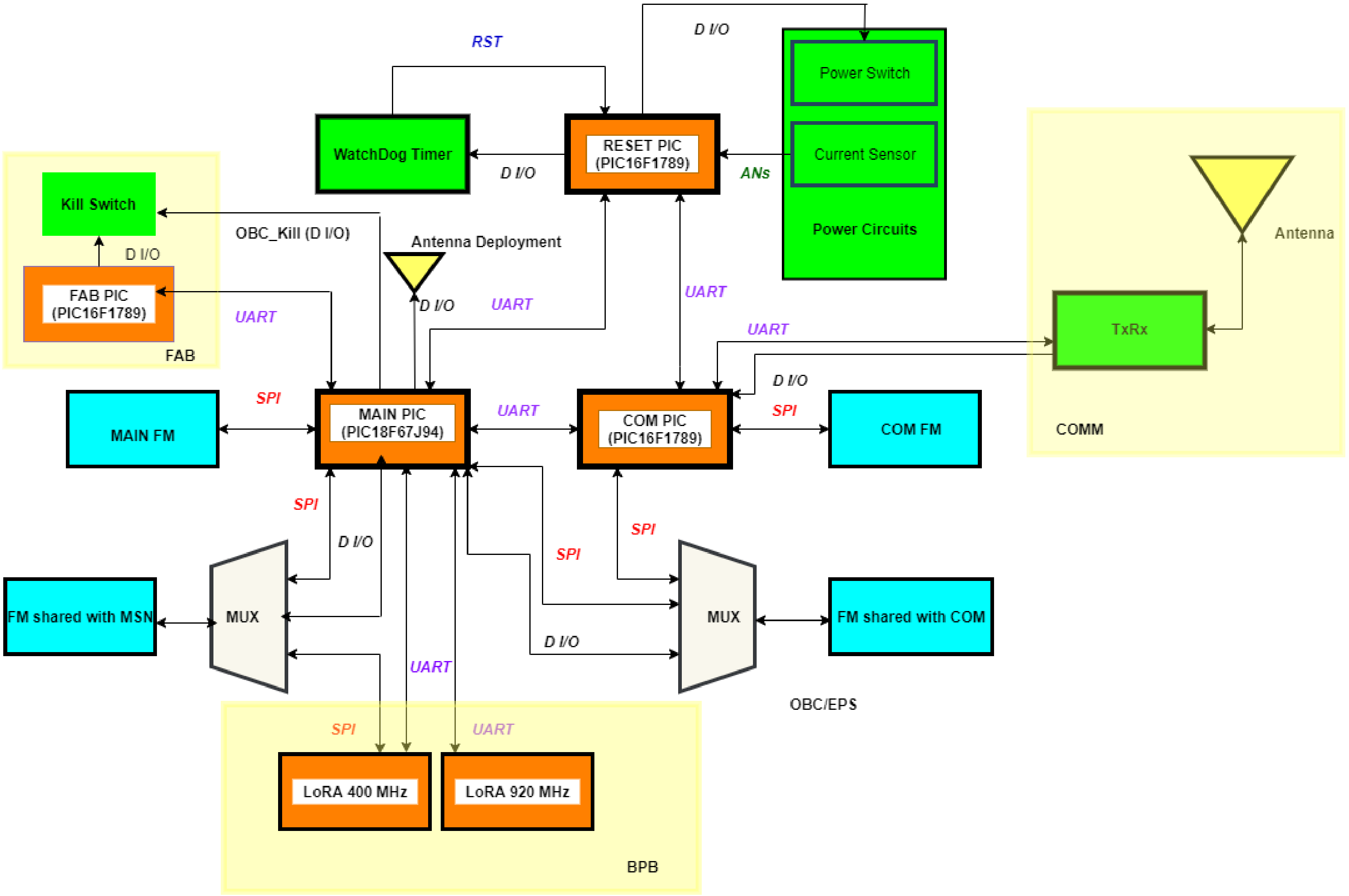

Credits : Pema-san and Victor-san

Communications Diagram

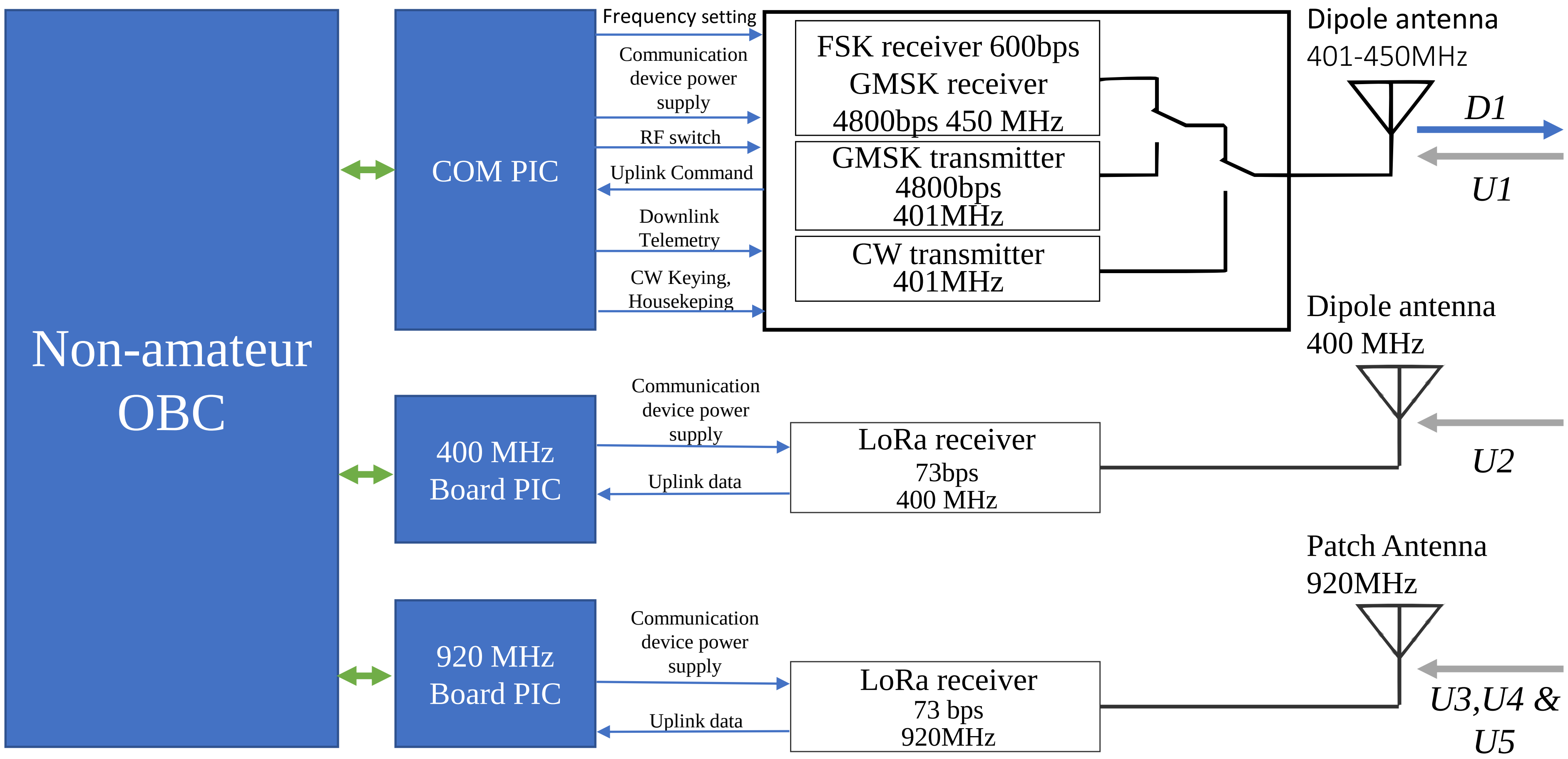

Power Line Diagram

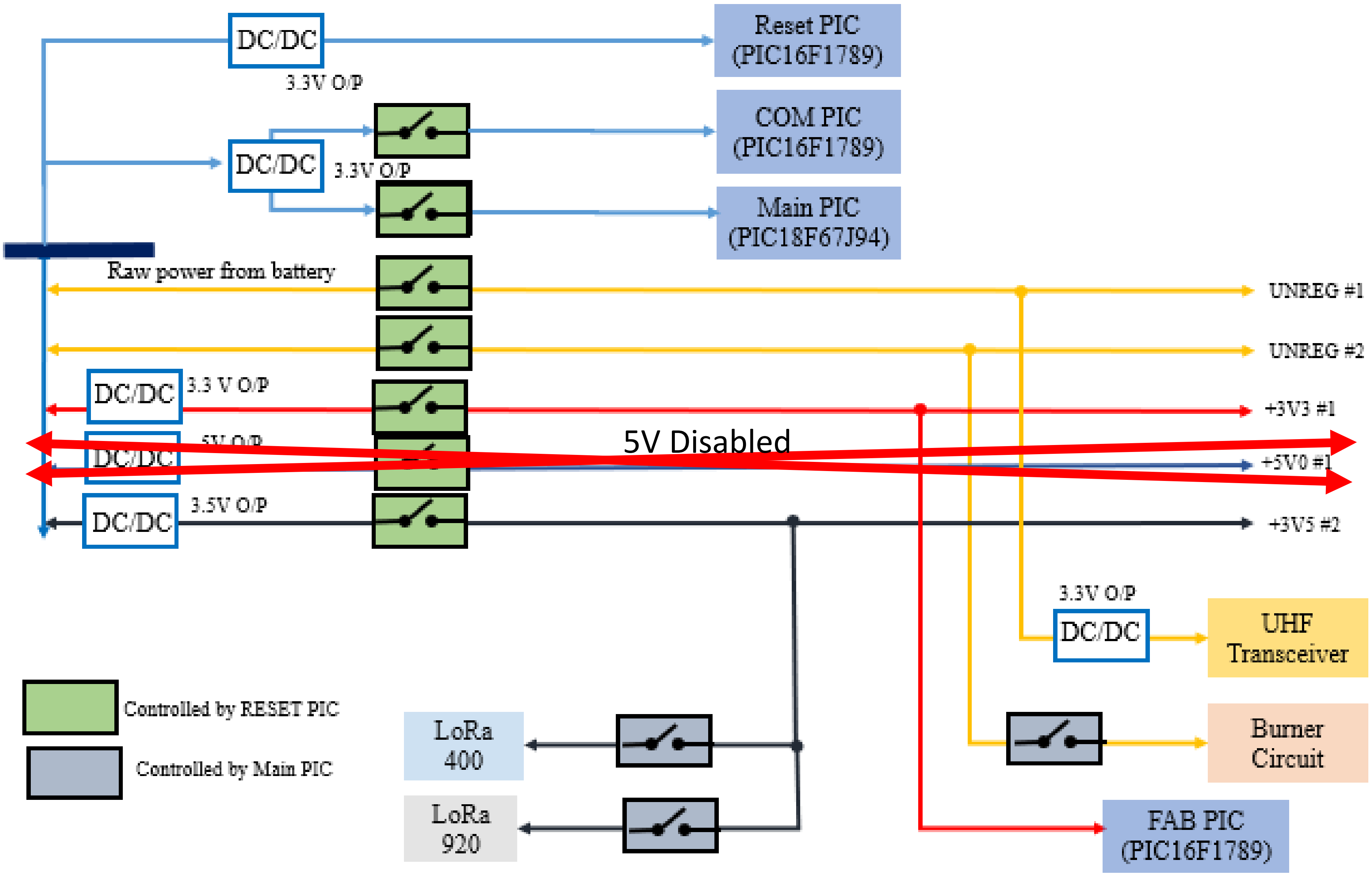

Structure Overview

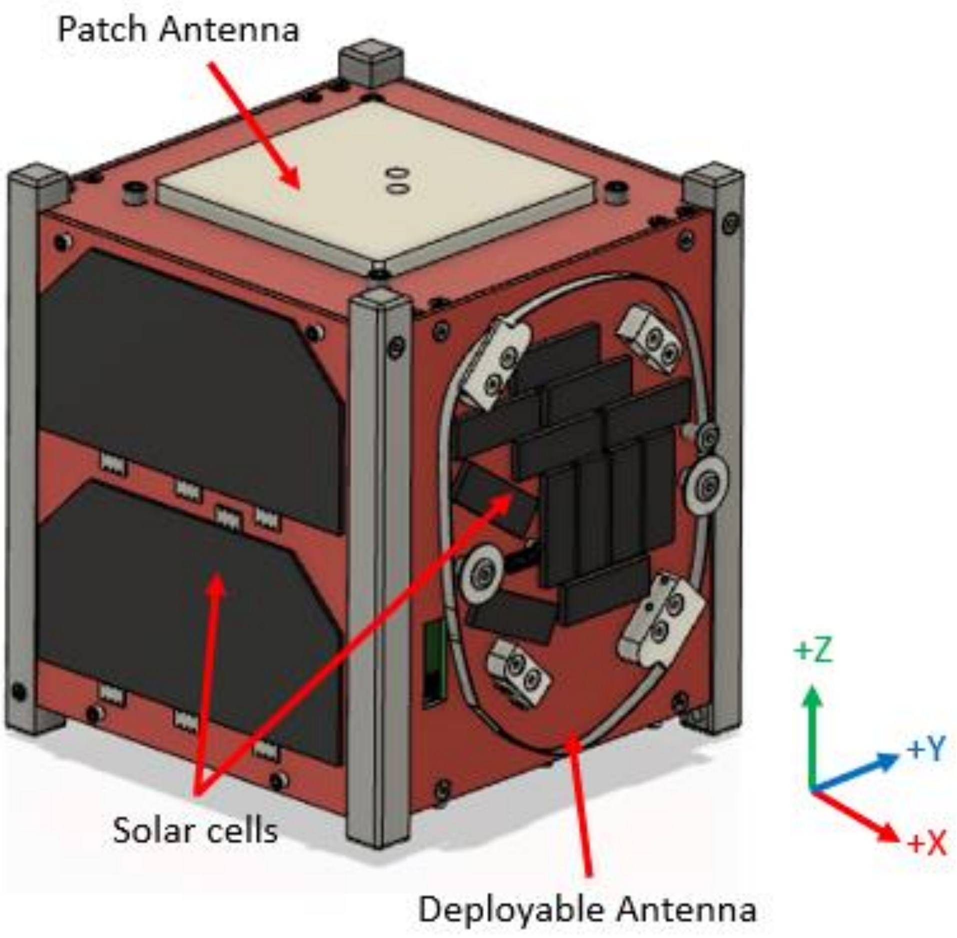

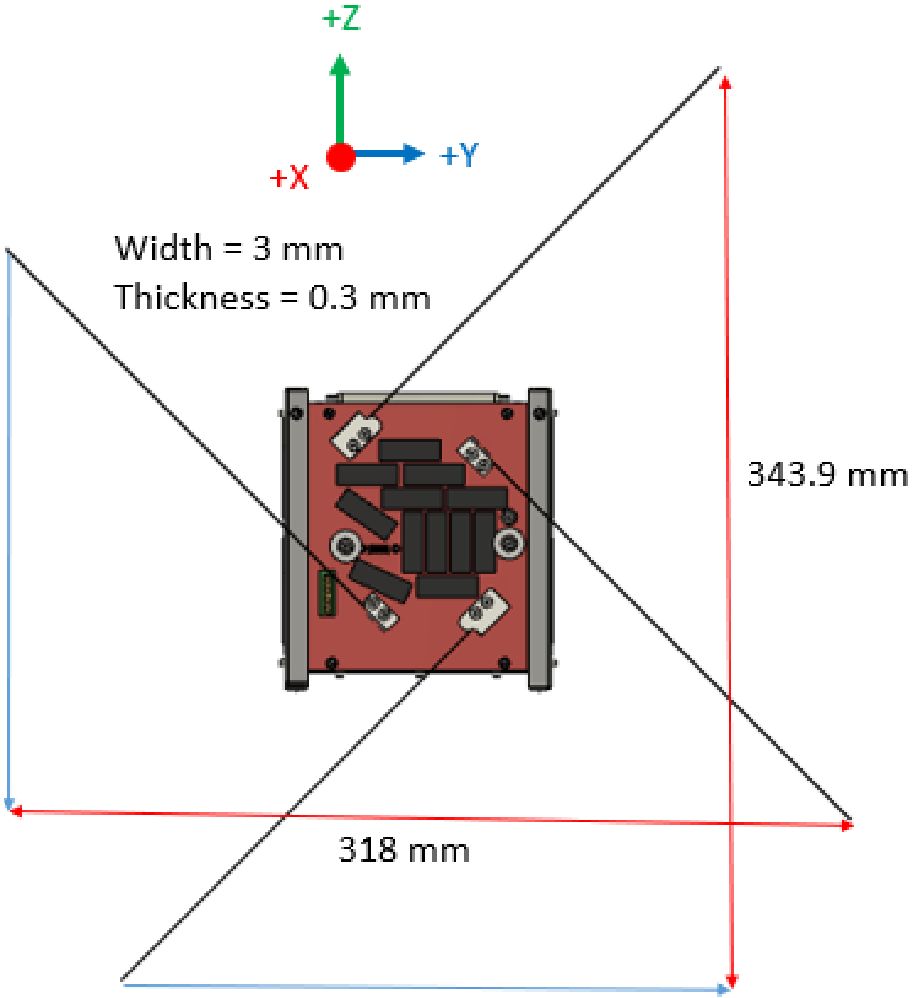

Deployment Overview

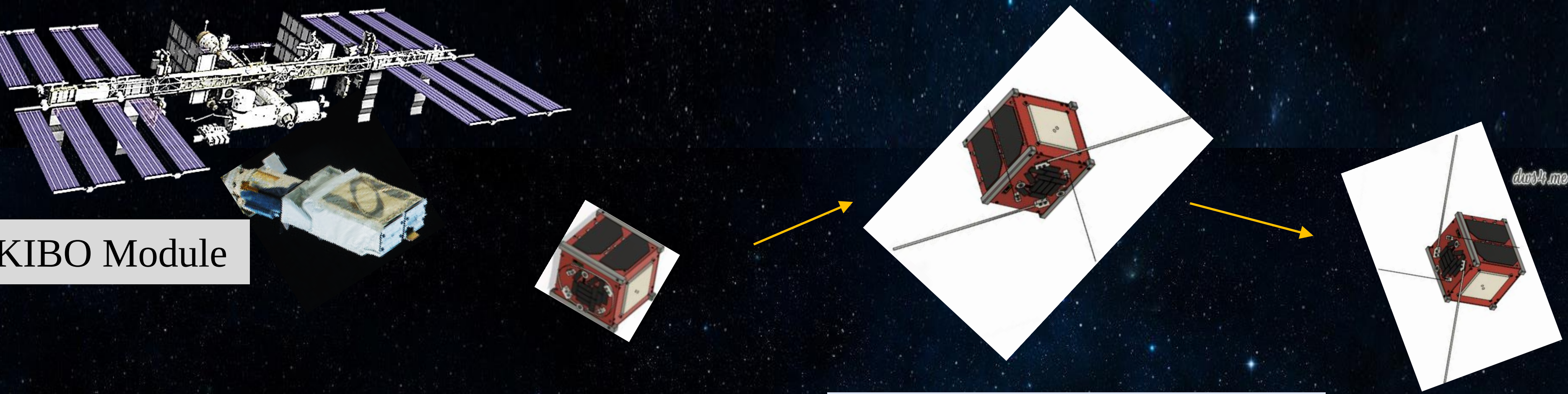

MicroOrbiter-1 Deployment (**t = 0**)

- Deployment switches are released
- System turns on
- Charging starts
- Telemetry is collected
- Attitude stabilization (detumbling)

(MAIN BUS)
t = 30.0 min + 30 sec
UHF board turns on
t = 31.0 min + 30 sec
CW transmission starts
t = 31.0 min + 30 sec ++
Dipole antennas deployment

Courtesy of Kitsune team

V. The LoRa IoT Missions

Credits to : Pooja, Fatima, Yasir Abbas, John Paul and Pema

Statement and Objective

Mission Statement

Satellite based Internet of Things (IoT) system is imperative for remote data collection that could be used for generating prediction profiles and monitoring variables.

Mission Objective

To demonstrate the use of a CubeSat based IoT system for remote data collection using commercial Ground Sensor Terminals (GST).

Background of IoT using satellites

IoT using satellites can be achieved using the Store and Forward system.

Store and forward is a telecommunications technique in which information is sent to an intermediate station where it is kept and forwarded at a later time to the final destination or to another intermediate station.

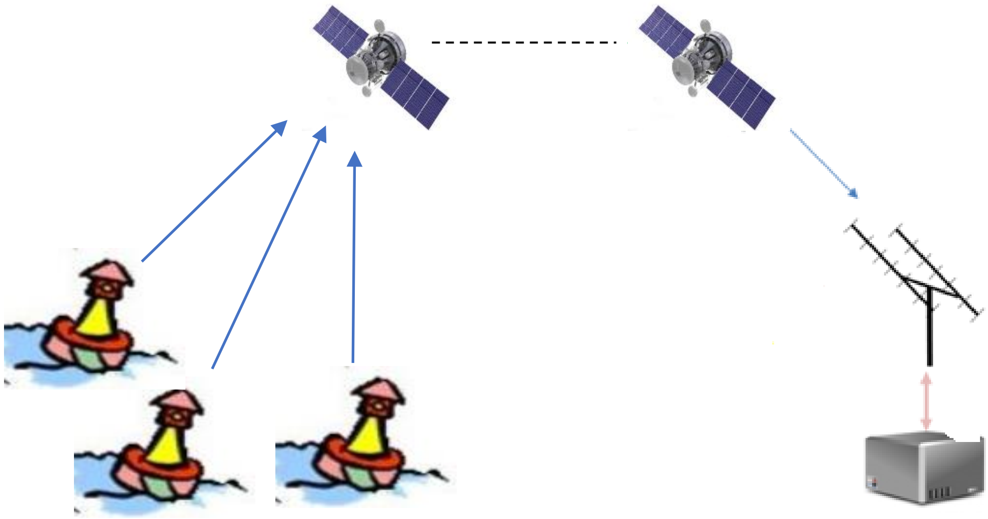

Remote GSTs

Main ground station

Mission Scenario

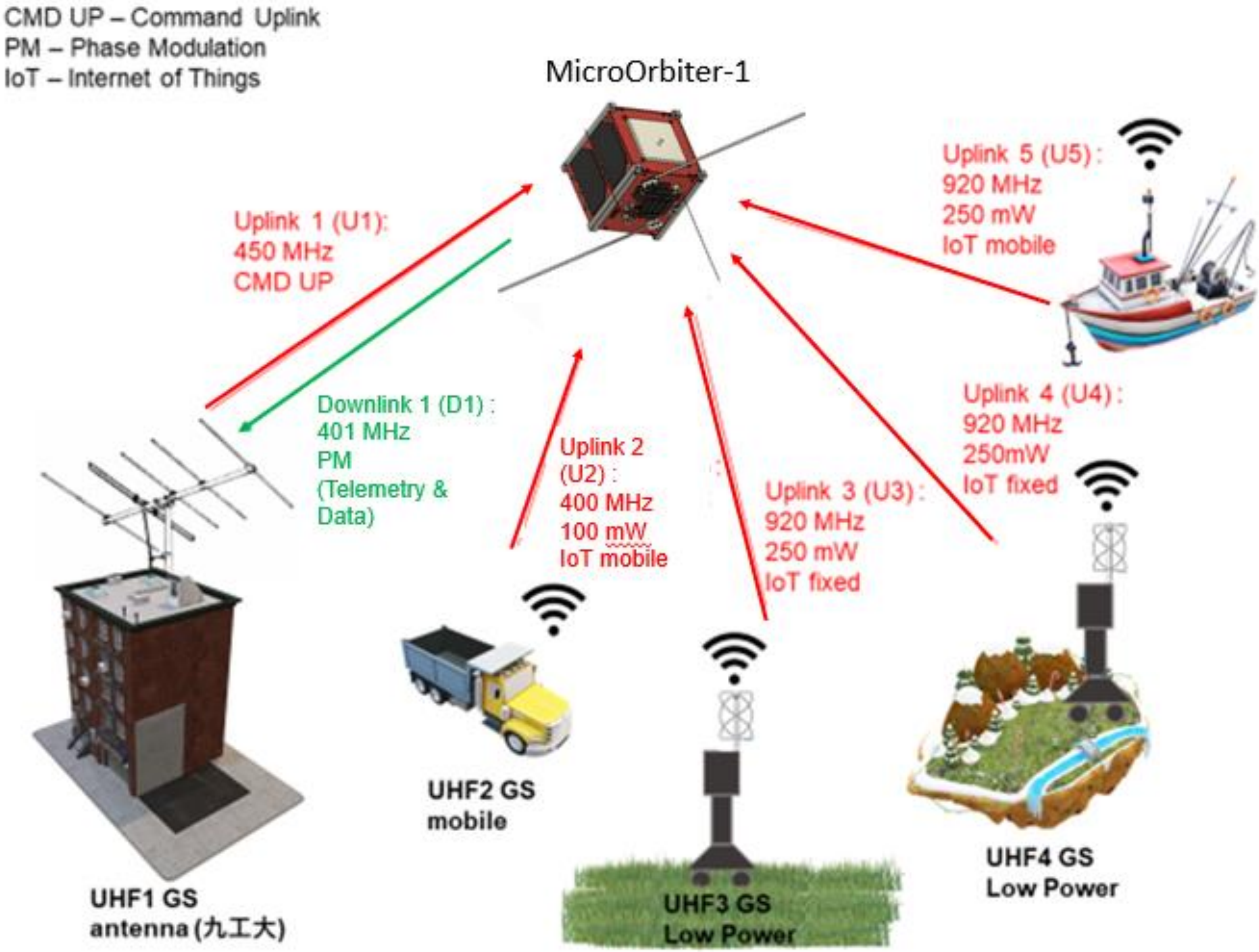

Mission Modes

24 hour mode

The LoRa receivers will remain turned ON 24 hours a day

Target Mode

The LoRa receivers can be set to turn on for at a specified time for specified time period. This mode can enable the LoRa receivers to be ON only above Japan.

Instant Mode

The LoRa receivers can be set to turn on instantly for specified time duration.

Mission Success Level

Minimum success:

- Achieve successful uplink in any band (400MHz/920MHz) band using a 1U CubeSat

Full Success:

- Achieve successful uplink using commercial GST in the 920MHz band

Extra success:

- Achieve data error rate to be less than 15%
- Receive data from all built GSTs through all receivers of the LoRa board for both frequencies

Mission Payload Block Diagram (400MHz)

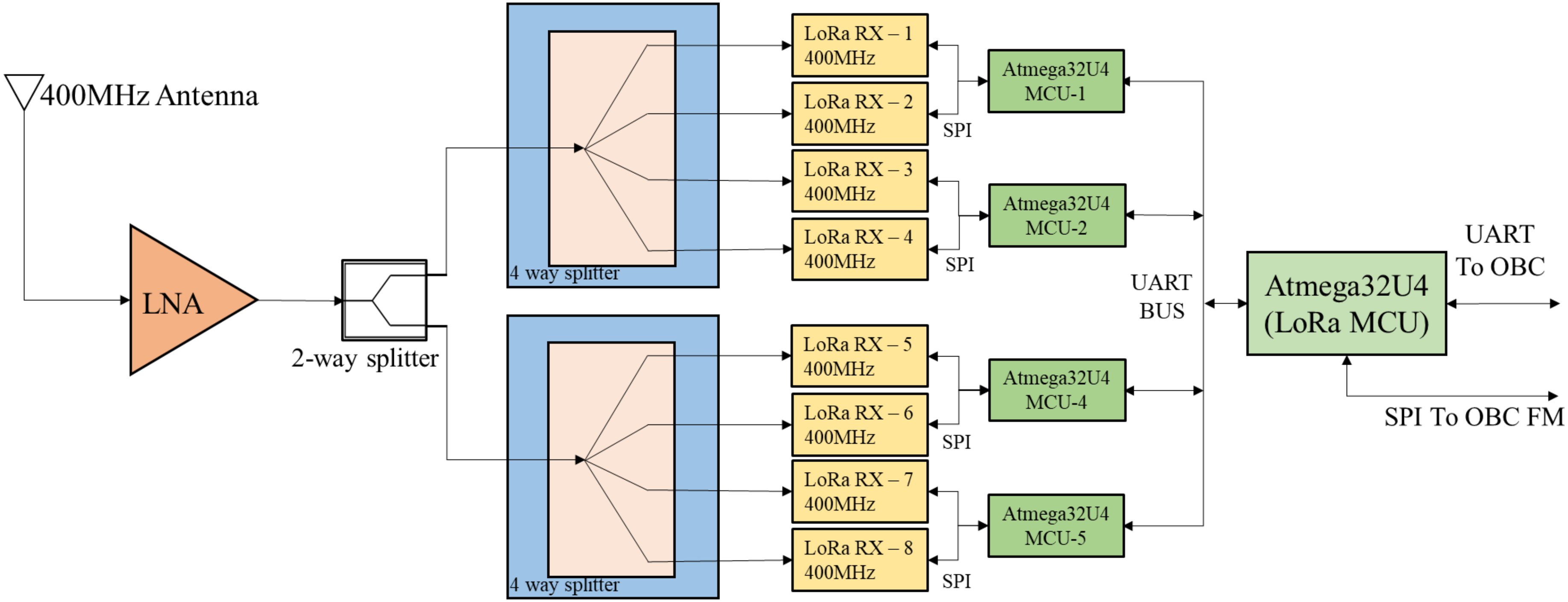

400 MHz PCB

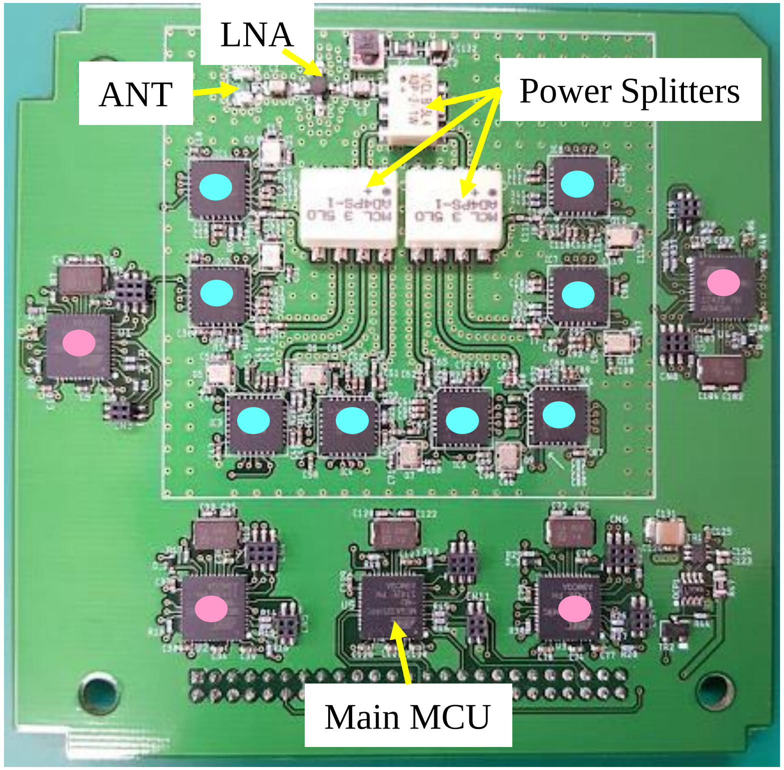

● RX MCU

● LoRa Receivers

Mission Payload Block Diagram (920MHz)

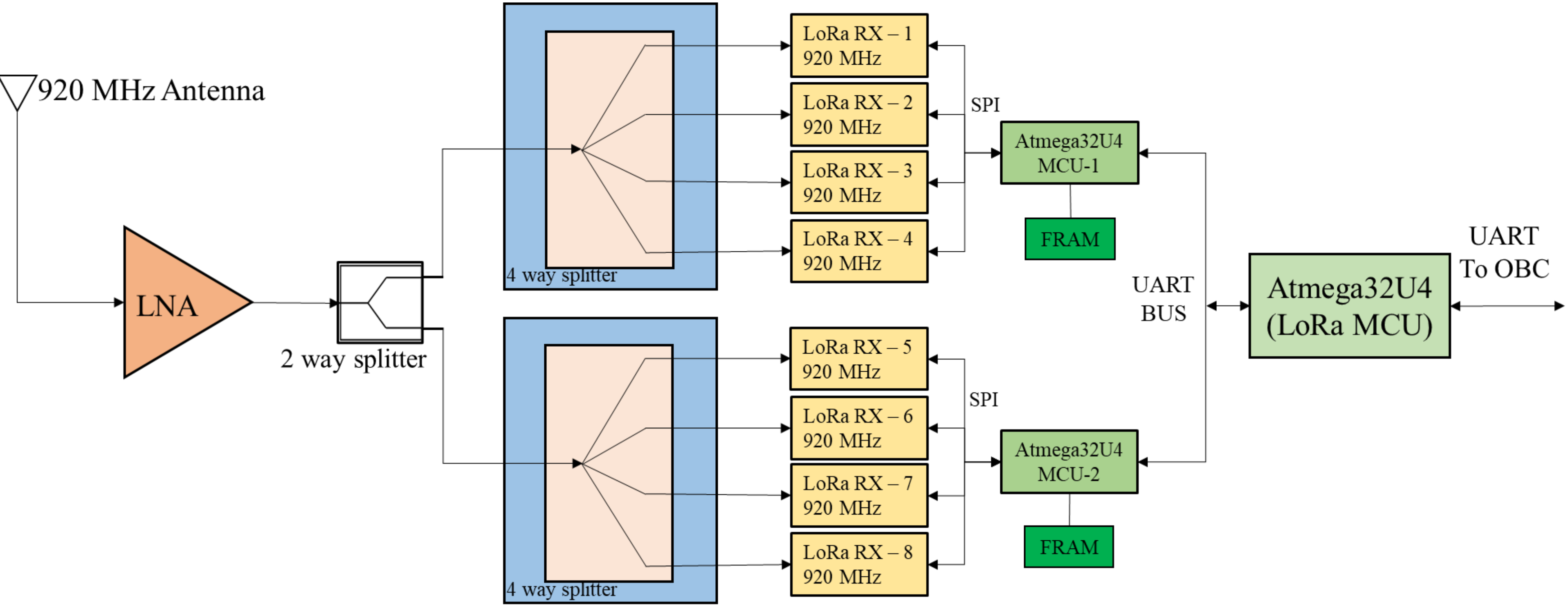

Atmega MCU 1,2 control 8 LoRa receivers and FRAMs acts as temporary memory before sending received data to LoRa MCU

920 MHz LoRa Programming

- All LoRa receiver modules can be programmed to have different operating frequencies, bandwidths, spreading factors, coding rates.
- A handshake function was implemented to confirm communication with OBC and LoRa MCU.
- **Functionality test (data reception & handshake): Successful**

Sent data to OBC from LoRa MCU after successful handshake

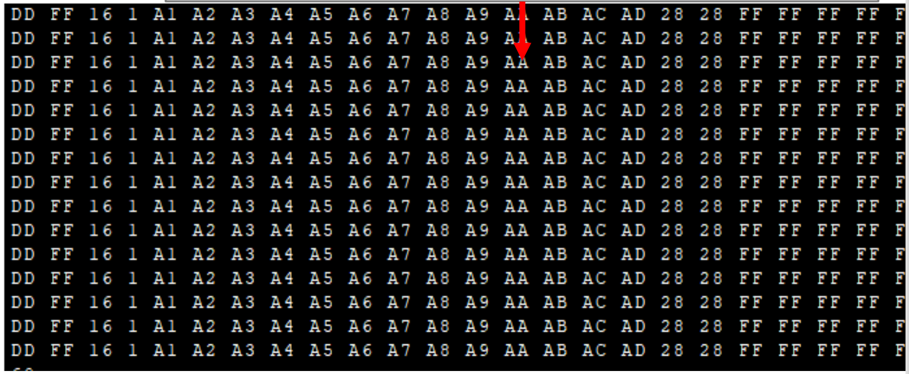

```
DD FF 16 1 A1 A2 A3 A4 A5 A6 A7 A8 A9 AA AB AC AD 28 28 FF FF FF FF F
DD FF 16 1 A1 A2 A3 A4 A5 A6 A7 A8 A9 AA AB AC AD 28 28 FF FF FF FF F
DD FF 16 1 A1 A2 A3 A4 A5 A6 A7 A8 A9 AA AB AC AD 28 28 FF FF FF FF F
DD FF 16 1 A1 A2 A3 A4 A5 A6 A7 A8 A9 AA AB AC AD 28 28 FF FF FF FF F
DD FF 16 1 A1 A2 A3 A4 A5 A6 A7 A8 A9 AA AB AC AD 28 28 FF FF FF FF F
DD FF 16 1 A1 A2 A3 A4 A5 A6 A7 A8 A9 AA AB AC AD 28 28 FF FF FF FF F
DD FF 16 1 A1 A2 A3 A4 A5 A6 A7 A8 A9 AA AB AC AD 28 28 FF FF FF FF F
DD FF 16 1 A1 A2 A3 A4 A5 A6 A7 A8 A9 AA AB AC AD 28 28 FF FF FF FF F
DD FF 16 1 A1 A2 A3 A4 A5 A6 A7 A8 A9 AA AB AC AD 28 28 FF FF FF FF F
DD FF 16 1 A1 A2 A3 A4 A5 A6 A7 A8 A9 AA AB AC AD 28 28 FF FF FF FF F
DD FF 16 1 A1 A2 A3 A4 A5 A6 A7 A8 A9 AA AB AC AD 28 28 FF FF FF FF F
DD FF 16 1 A1 A2 A3 A4 A5 A6 A7 A8 A9 AA AB AC AD 28 28 FF FF FF FF F
DD FF 16 1 A1 A2 A3 A4 A5 A6 A7 A8 A9 AA AB AC AD 28 28 FF FF FF FF F
DD FF 16 1 A1 A2 A3 A4 A5 A6 A7 A8 A9 AA AB AC AD 28 28 FF FF FF FF F
DD FF 16 1 A1 A2 A3 A4 A5 A6 A7 A8 A9 AA AB AC AD 28 28 FF FF FF FF F
```

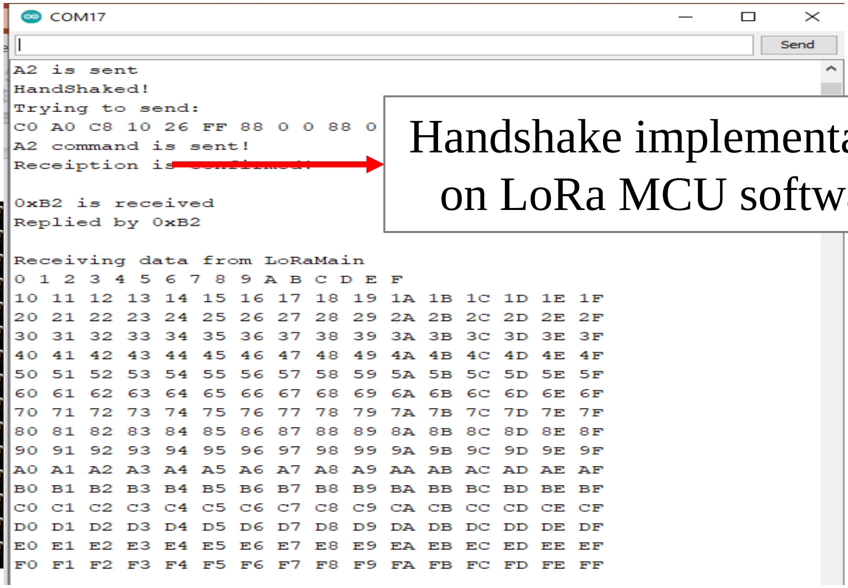

```
A2 is sent
HandShaked!
Trying to send:
C0 A0 C8 10 26 FF 88 0 0 88 0
A2 command is sent!
Receiption is confirmed!

0xB2 is received
Replied by 0xB2

Receiving data from LoRaMain
0 1 2 3 4 5 6 7 8 9 A B C D E F
10 11 12 13 14 15 16 17 18 19 1A 1B 1C 1D 1E 1F
20 21 22 23 24 25 26 27 28 29 2A 2B 2C 2D 2E 2F
30 31 32 33 34 35 36 37 38 39 3A 3B 3C 3D 3E 3F
40 41 42 43 44 45 46 47 48 49 4A 4B 4C 4D 4E 4F
50 51 52 53 54 55 56 57 58 59 5A 5B 5C 5D 5E 5F
60 61 62 63 64 65 66 67 68 69 6A 6B 6C 6D 6E 6F
70 71 72 73 74 75 76 77 78 79 7A 7B 7C 7D 7E 7F
80 81 82 83 84 85 86 87 88 89 8A 8B 8C 8D 8E 8F
90 91 92 93 94 95 96 97 98 99 9A 9B 9C 9D 9E 9F
A0 A1 A2 A3 A4 A5 A6 A7 A8 A9 AA AB AC AD AE AF
B0 B1 B2 B3 B4 B5 B6 B7 B8 B9 BA BB BC BD BE BF
C0 C1 C2 C3 C4 C5 C6 C7 C8 C9 CA CB CC CD CE CF
D0 D1 D2 D3 D4 D5 D6 D7 D8 D9 DA DB DC DD DE DF
E0 E1 E2 E3 E4 E5 E6 E7 E8 E9 EA EB EC ED EE EF
F0 F1 F2 F3 F4 F5 F6 F7 F8 F9 FA FB FC FD FE FF
```

Handshake implementation on LoRa MCU software

Test Results

Mission with its best configuration	Received Sensitivity (dBm)
400 MHz	-128 dBm
920 MHz	-134 dBm

Link Margin Calculation for 920MHz

Transmit Power	Link Margin for Different Elevation Angles									
	0 deg	10 deg	20 deg	30 deg	40 deg	50 deg	60 deg	70 deg	80 deg	90 deg
20mW	-15.5	-11.4	-8.1	-5.6	-3.8	-2.4	-1.4	-0.8	-0.4	-0.3
100mW	-8.5	-4.4	-1.1	1.4	3.2	4.6	5.6	6.2	6.6	6.7
250mW	-4.5	-0.4	2.9	5.4	7.2	8.6	9.5	10.2	10.6	10.7

🟩 Link margin is greater than 0dB

Mission Flow Chart - Satellite

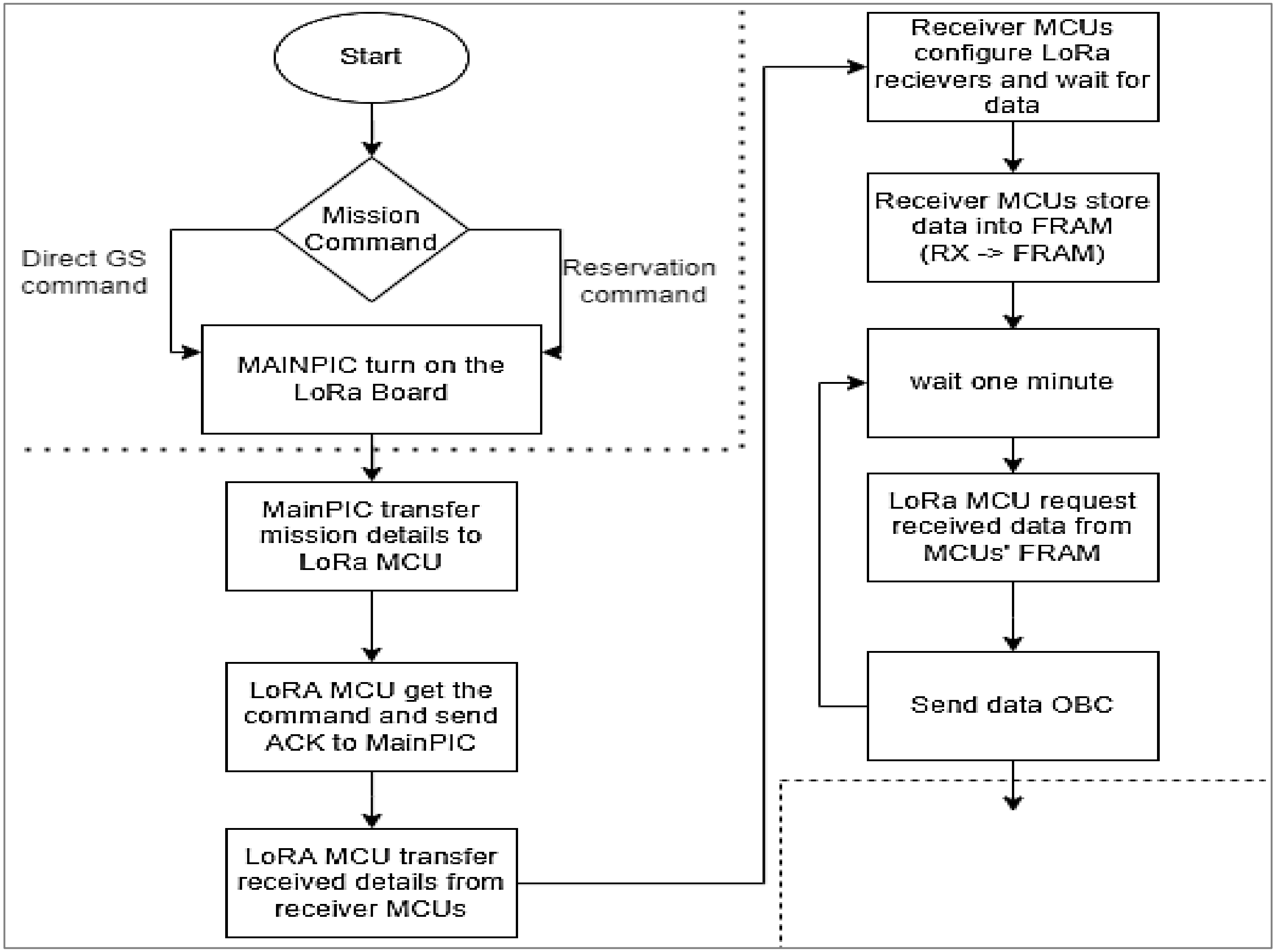

Start

Mission Command

Direct GS command

Reservation command

MAINPIC turn on the LoRa Board

MainPIC transfer mission details to LoRa MCU

LoRA MCU get the command and send ACK to MainPIC

LoRA MCU transfer received details from receiver MCUs

Receiver MCUs configure LoRa recievers and wait for data

Receiver MCUs store data into FRAM (RX -> FRAM)

wait one minute

LoRa MCU request received data from MCUs' FRAM

Send data OBC

Command Format Between OBC and LoRa Board

- Inherited software from KITSUNE
  - Ex:- MainPIC to LoRa MCU array

0	1	2	3	4	5	6	7	8	9	10	11	12	13	14	15	16	17
0xDD				Day num high	Day num low	RX on/off	RX-1,2 FOFB	RX-1 Freq	RX-2 Freq	RX-3,4 FOFB	RX-3 Freq	RX-4 Freq	RX-5,6 FOFB	RX-5 Freq	RX-6 Freq	RX-7,8 FOFB	RX-7 Freq

18	19	20	21	22	23	24	25	26	27	28	29	30	31	32	33	34	35
RX-8 Freq	RX-1 SF,CR	RX-2 SF,CR	RX-3 SF,CR	RX-4 SF,CR	RX-5 SF,CR	RX-6 SF,CR	RX-7 SF,CR	RX-8 SF,CR	RX-1 BW	RX-2 BW	RX-3 BW	RX-4 BW	RX-5 BW	RX-6 BW	RX-7 BW	RX-8 BW	0xEE

- Receiver settings can be changed individually.
- Below settings are in the command.
  - Receiver frequency
  - Receiver bandwidth
  - Spreading factor
  - Coding rate

ACS
(Attitude Control System)

Credits to : Maximilien Berthet

Basic requirement

- IoT-based communication between MO-1 and commercial Ground Sensor Terminals (GST) requires southward orientation of satellite towards the GST to enhance performance.
  - > Onboard receiver has limited “field of view”
  - > Attitude control system (ACS) needed
  - > Passive magnetic system used

Passive magnetic ACS

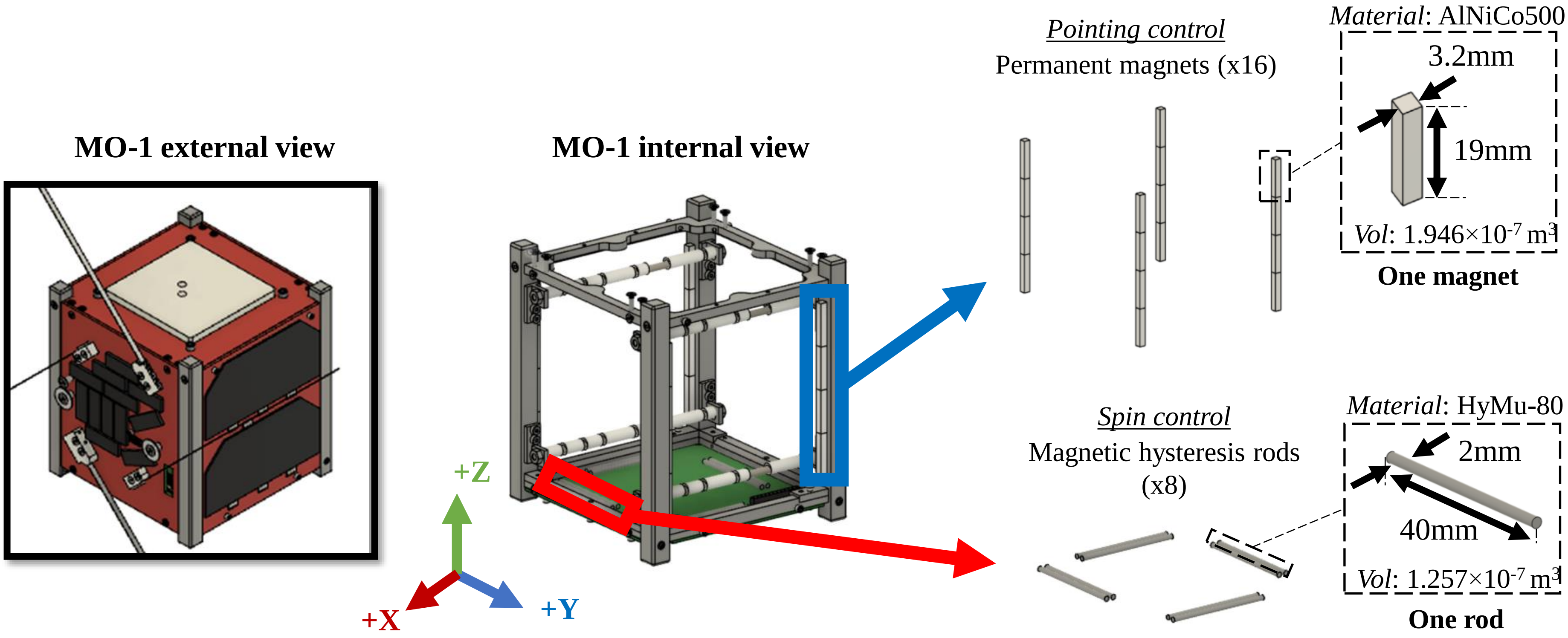

MO-1 external view

MO-1 internal view

Pointing control

Permanent magnets (x16)

Material: AlNiCo500

Vol: 1.946×10^-7 m^3

One magnet

Spin control

Magnetic hysteresis rods (x8)

Material: HyMu-80

Vol: 1.257×10^-7 m^3

One rod

Key points: Fully passive system. No attitude determination: just control.

Passive magnetic ACS

Permanent magnets on rails

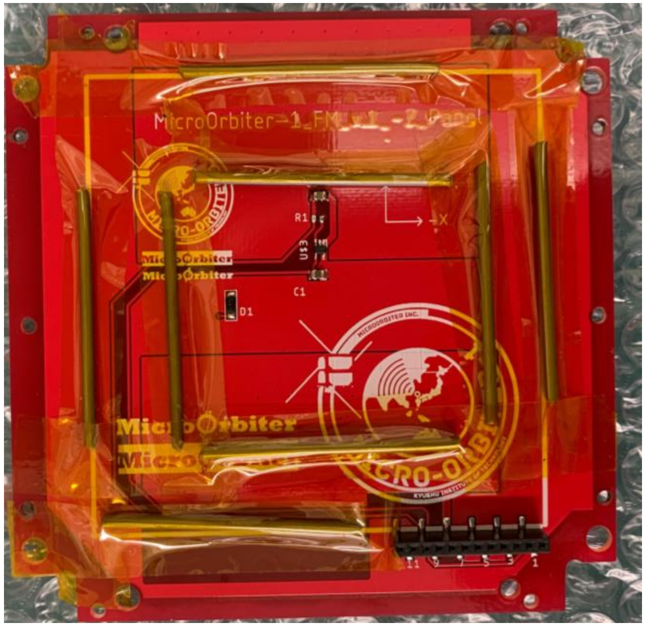

Hysteresis dampers on the –Zpanel

Simulated orbit-attitude dynamics

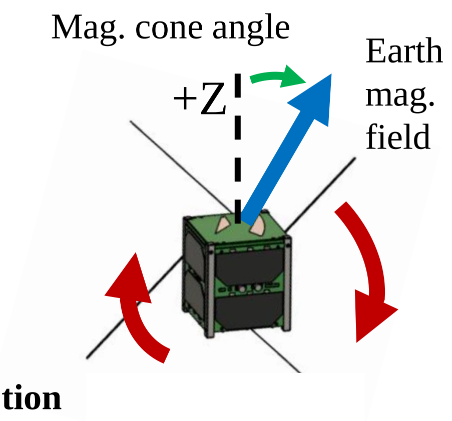

Spin rates and pointing angle

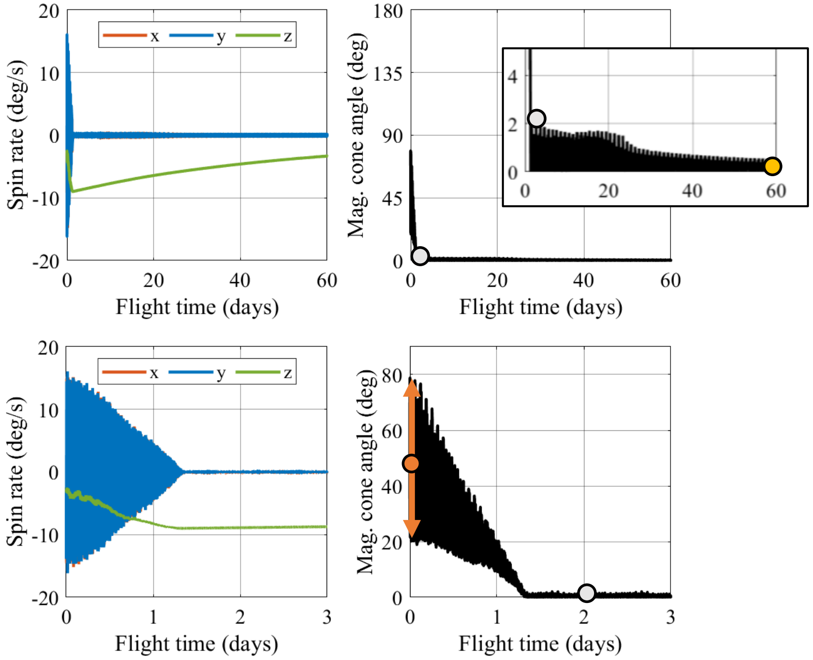

- Alignment with magnetic field within 2 days.
- Pointing error < 2°.
- Steady state spin rate is around 2-3°/s after 2 months.

Attitude motion

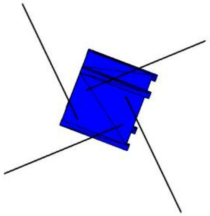

After 0 days 🟠

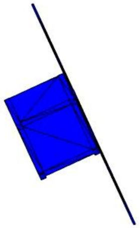

After 2 days ○

After 55 days 🟡

Structure

Credits : Yudai Etsunaga
Maximilien Berthet
Fahd Moumni

External view of the satellite

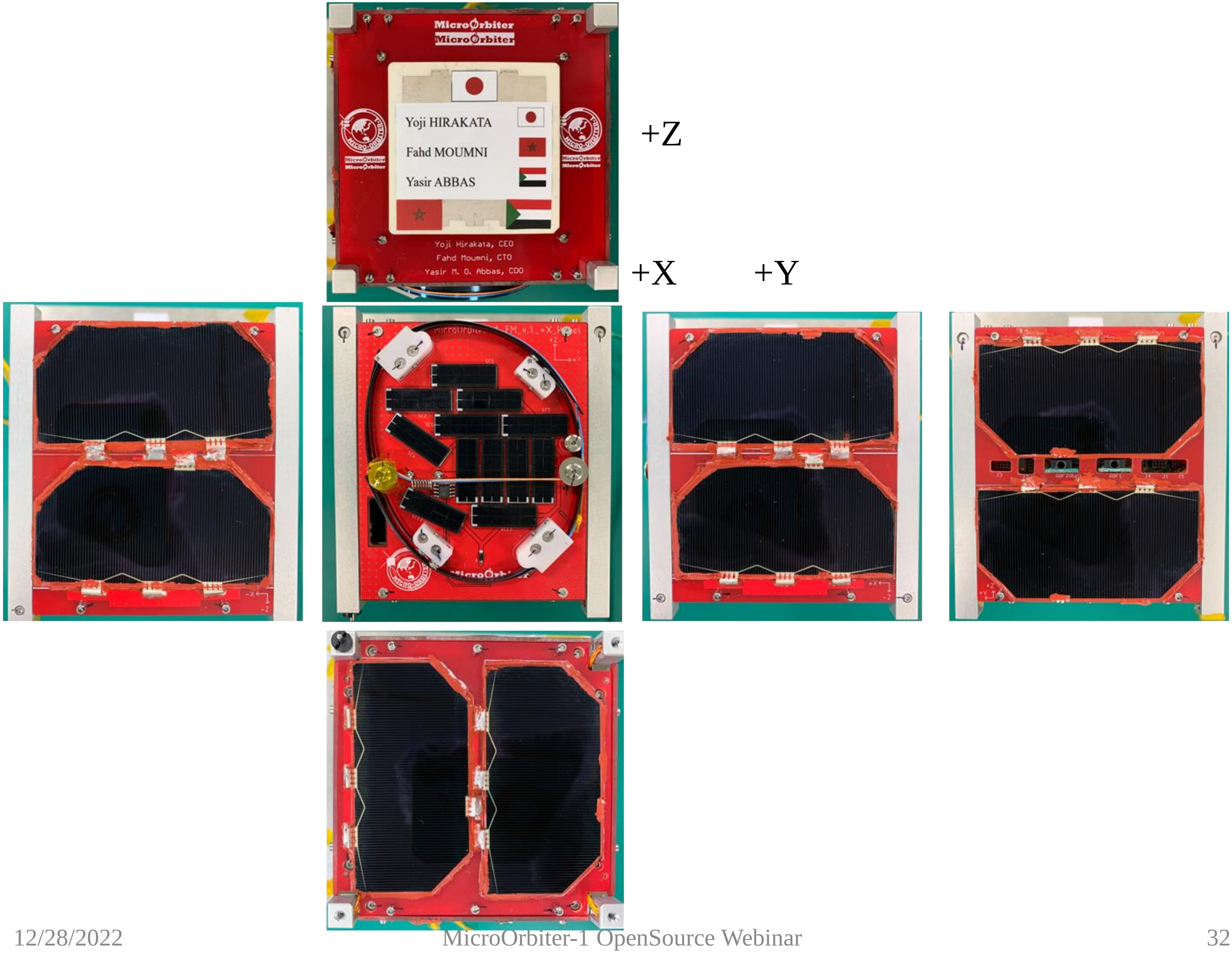

Exploded view

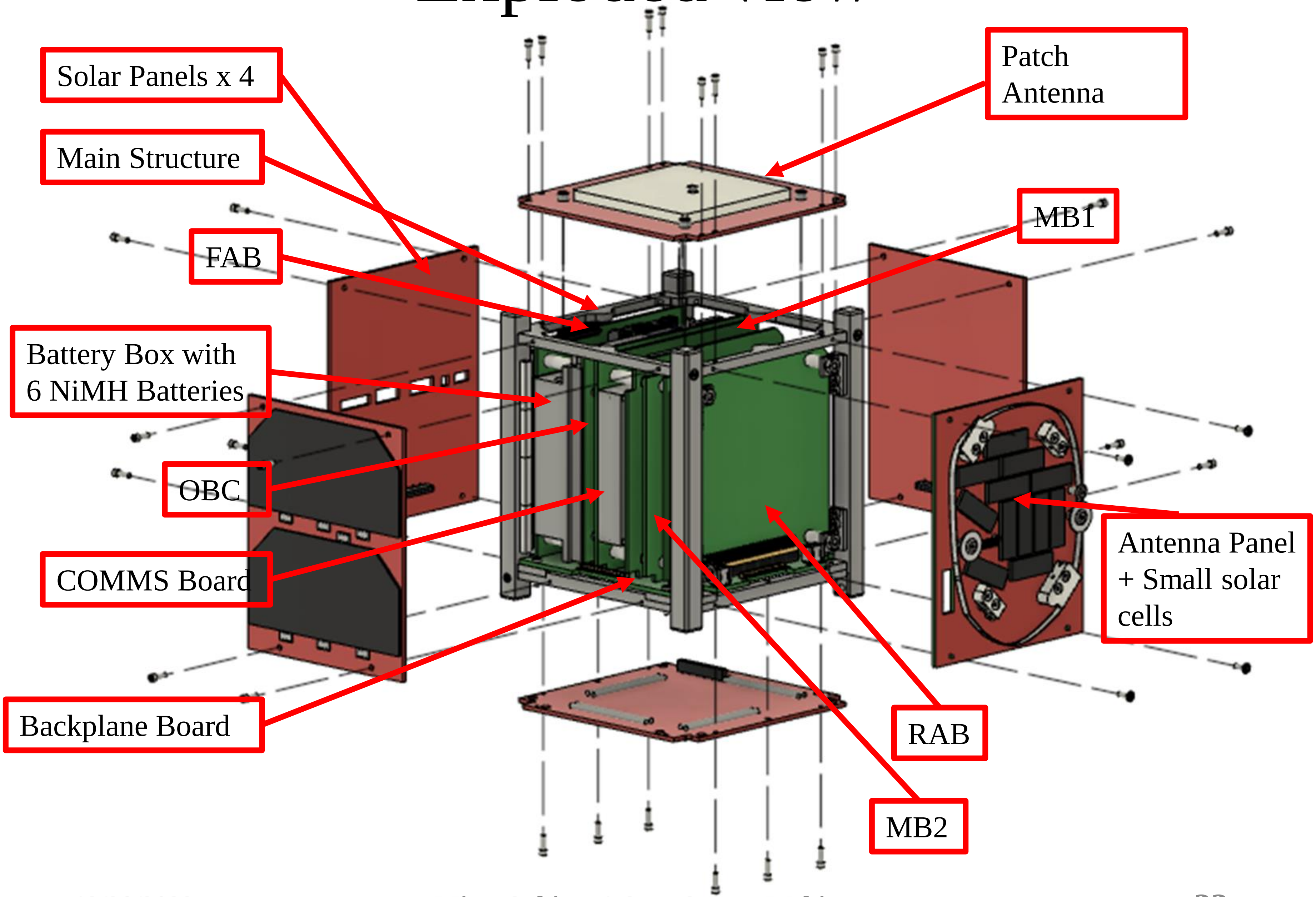

Solar Panels x 4

Main Structure

FAB

Battery Box with
6 NiMH Batteries

OBC

COMMS Board

Backplane Board

Patch
Antenna

MB1

Antenna Panel
+ Small solar
cells

RAB

MB2

Main structure

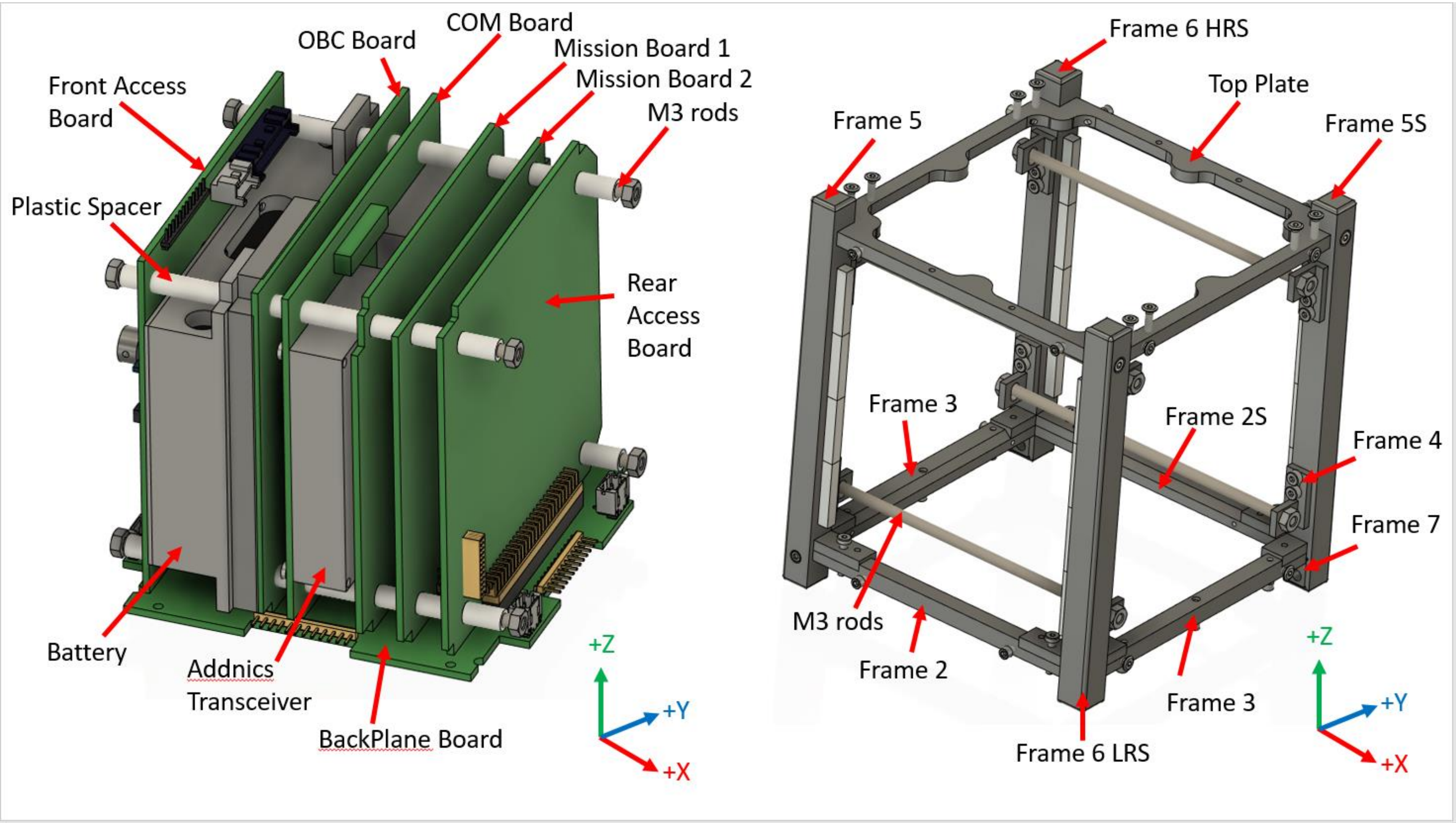

Antenna Subsystem

Credits : John Paul Almonte

Fahd Moumni

Yasir Abbas

Background

MO-1 has two UHF dipole antennas

- 400 MHz for LoRa IoT Mission
- 401 - 450 MHz for communication with ground station

Antennas will be stowed when launched and deployed upon release in orbit hence the need for a deployment mechanism

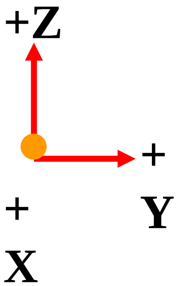

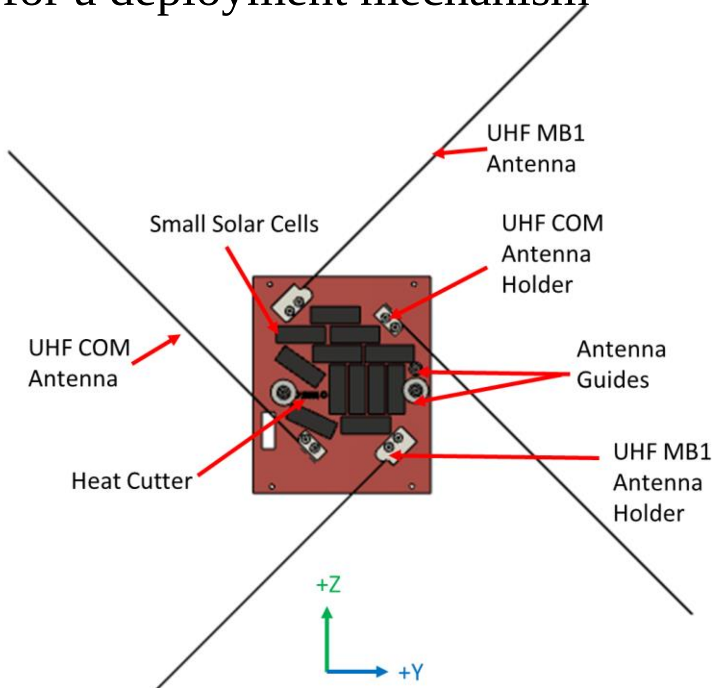

These two dipole antennas must deploy reliably using a burner circuit

Antenna Board (Detailed View)

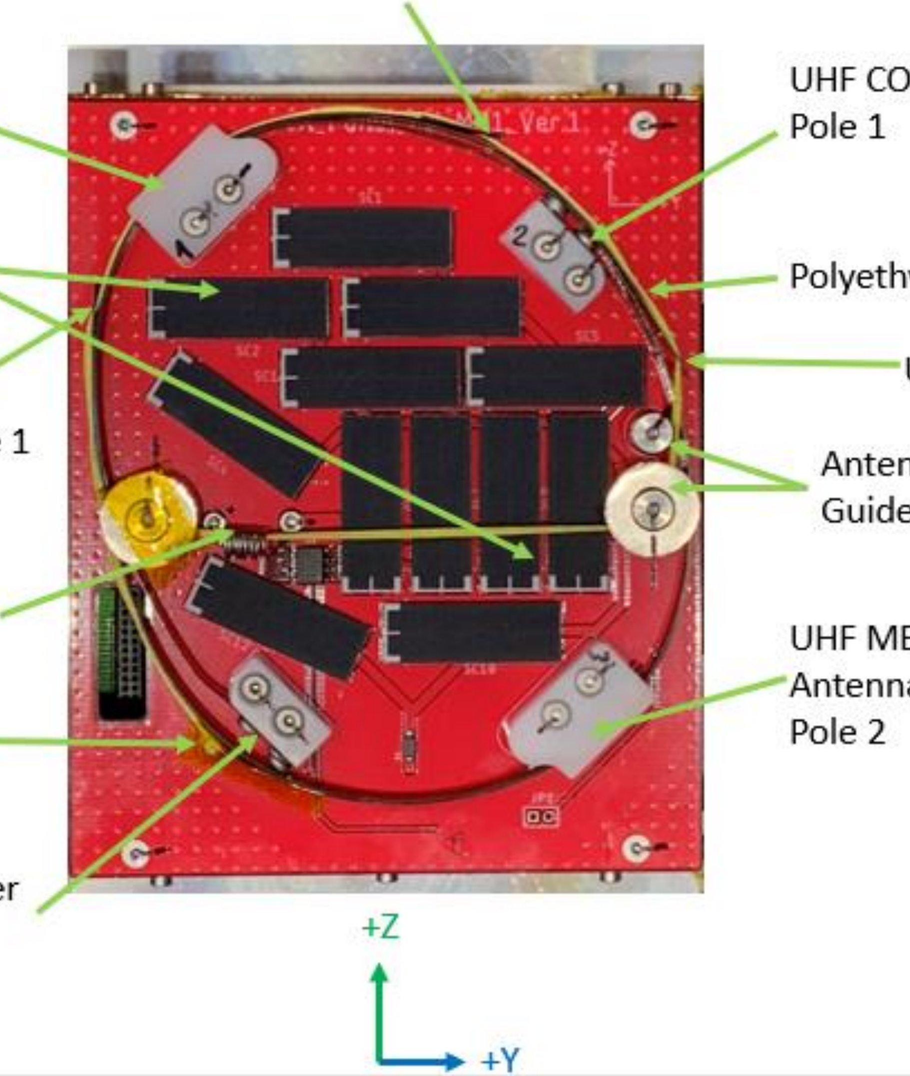

UHF MB1 Antenna Tip Pole 2

UHF MB1 Antenna Holder Pole 1

UHF COM Antenna Holder Pole 1

Small Solar Cells Area

Polyethylene Wire x 2

UHF COM Antenna Tip Pole 2

UHF COM Antenna Tip Pole 1

Antenna Guides

Heat Cutter

UHF MB1 Antenna Holder Pole 2

UHF MB1 Antenna Tip Pole 1

UHF COM Antenna Holder Pole 2

Antenna Board (Simple View)

LoRa Antenna

COMM Antenna

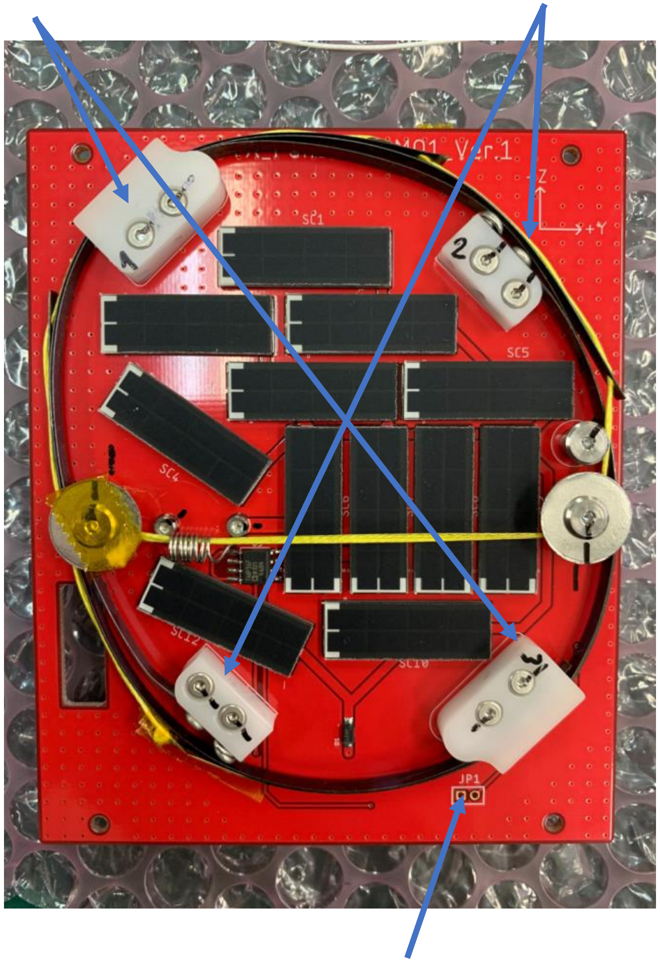

Inhibit Switch

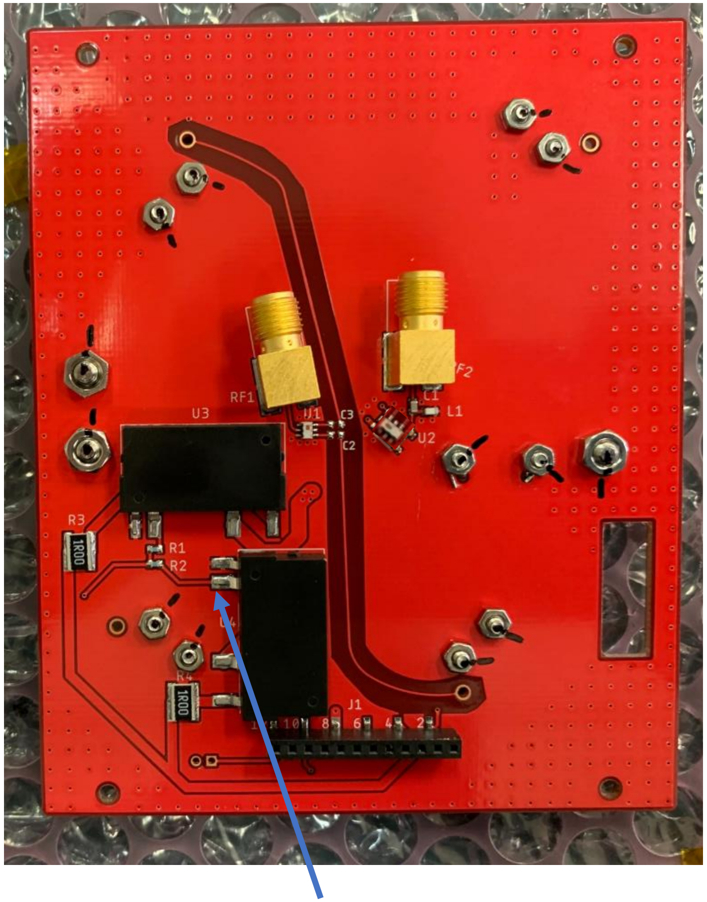

Antenna Deployment Circuit

Antenna Tuning – Results

UHF COMM Antenna

- Target Frequency: 401 – 450 MHz
- S11 < -10 dB achieved for the target frequencies

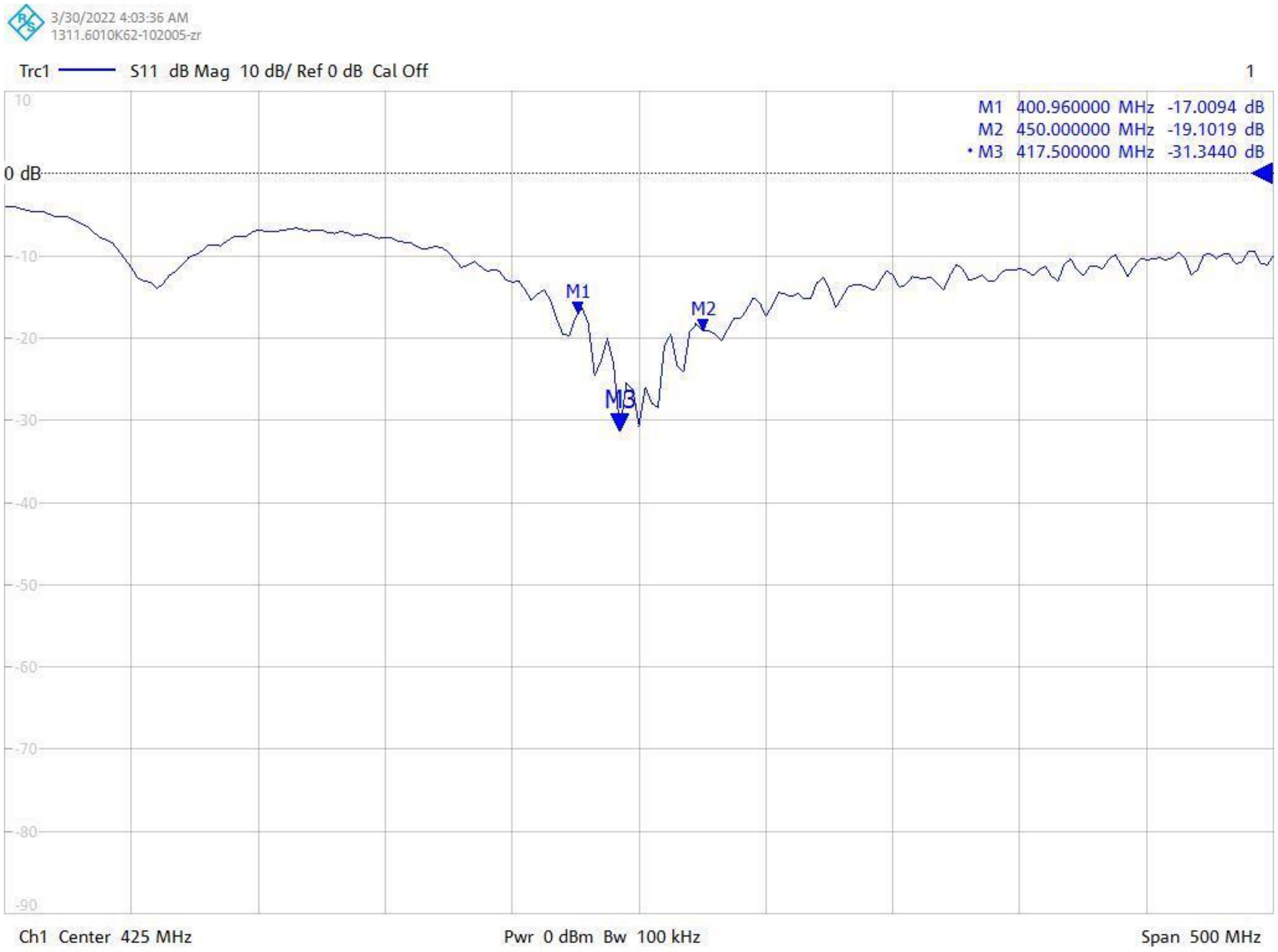

Antenna Tuning – Results

LoRa Antenna

- Target Frequency: 400 MHz

- S11 > -10 dB at the target frequency
- Needs to be further tuned

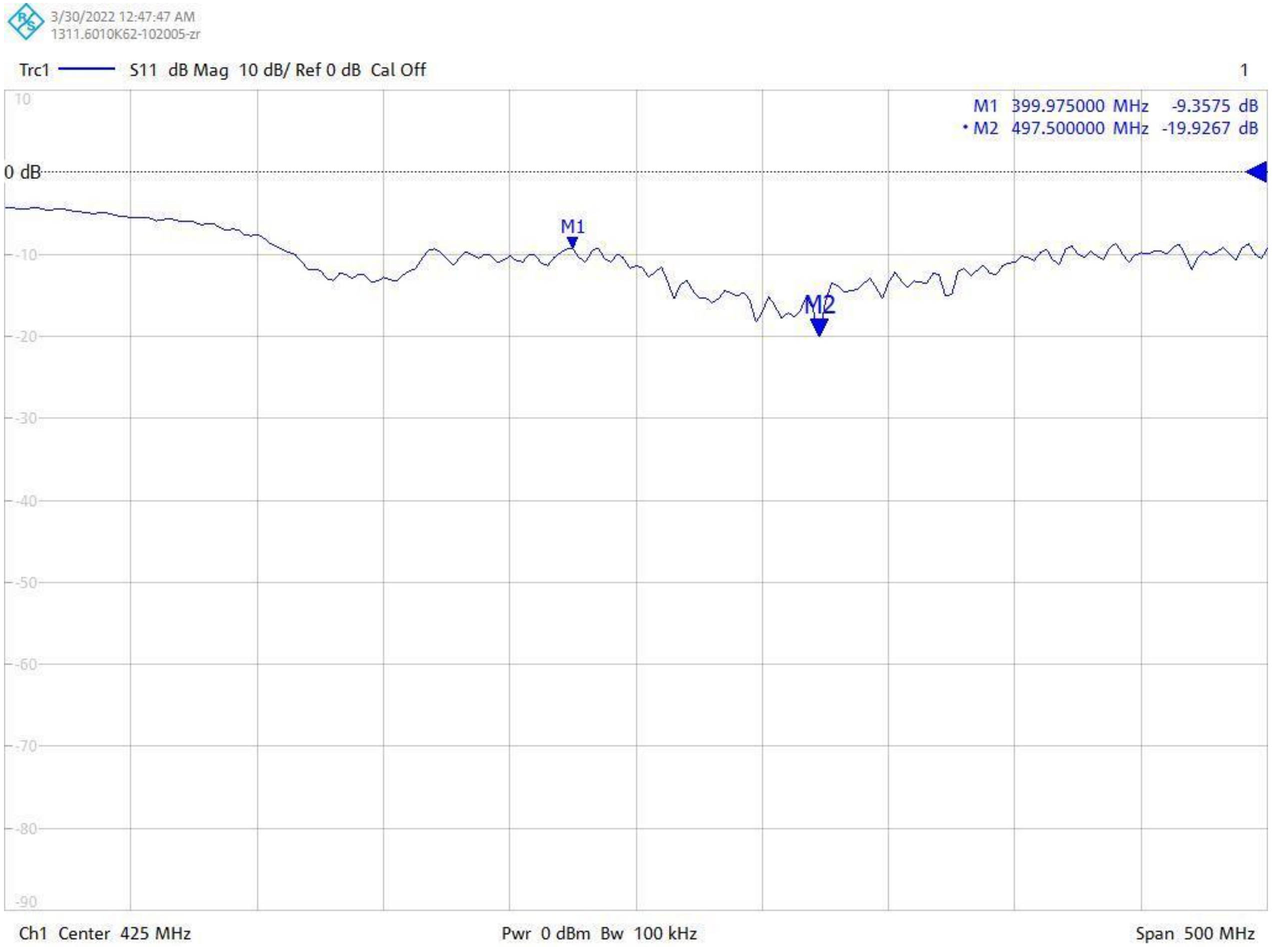

UHF COMM Antenna (Downlink)

E-Plane

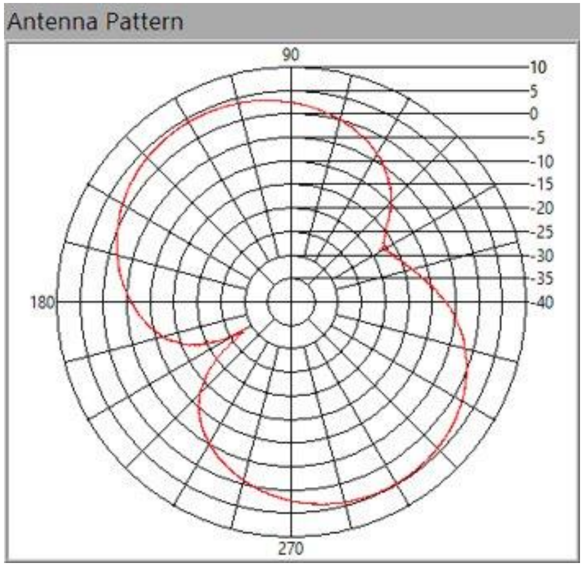

Maximum Gain of 4 dBm

H-Plane

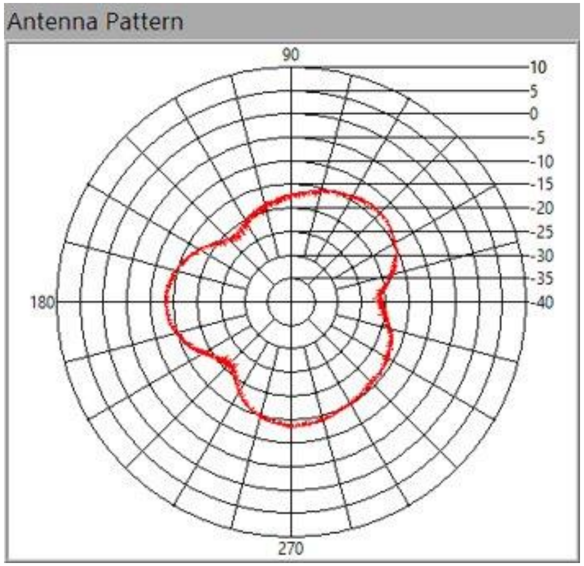

Maximum Gain of –14 dBm

UHF COMM Antenna (Uplink)

E-Plane

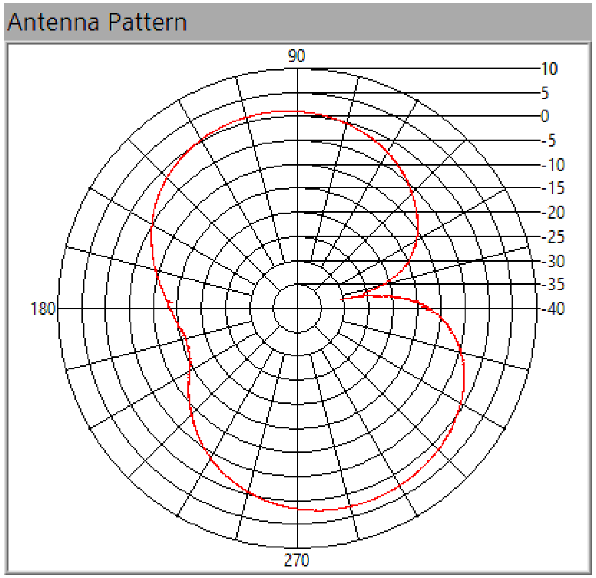

Maximum Gain of 2.5 dBm

H-Plane

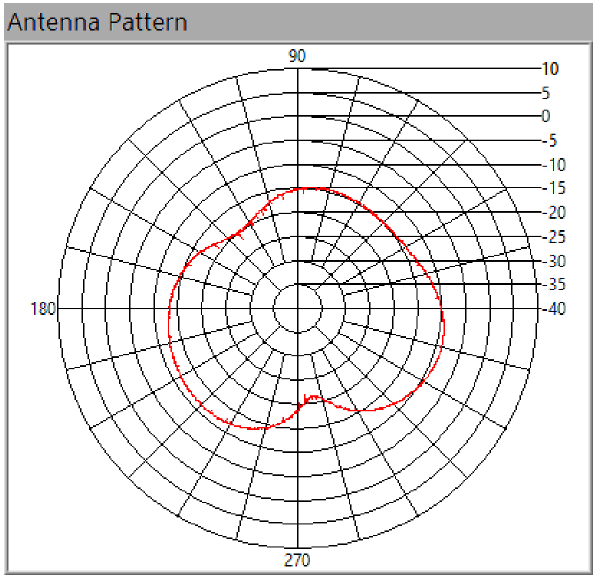

Maximum Gain of -9 dBm

LoRa 920MHz Patch Antenna (2.15 dBm)

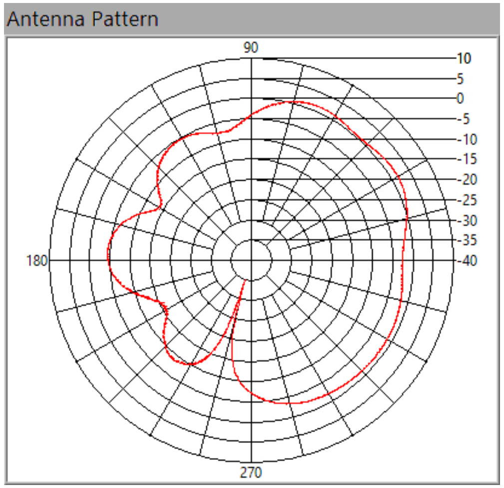

Horizontal Ref.
Az. Patch

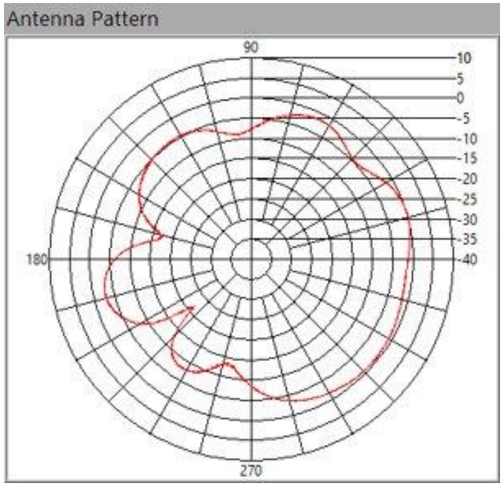

Horizontal Ref.
El. Patch

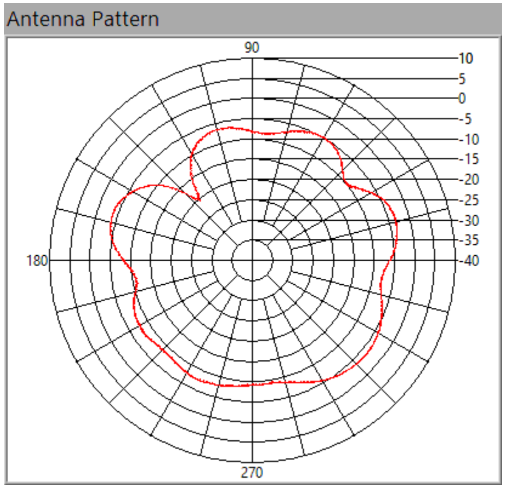

Vertical Ref.
Az. Patch

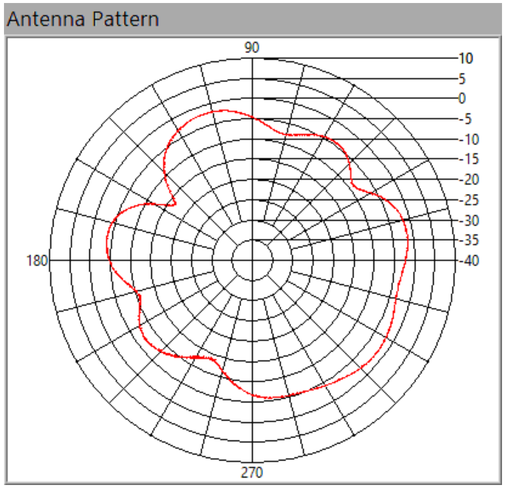

Vertical Ref.
El. Patch

Block Diagram

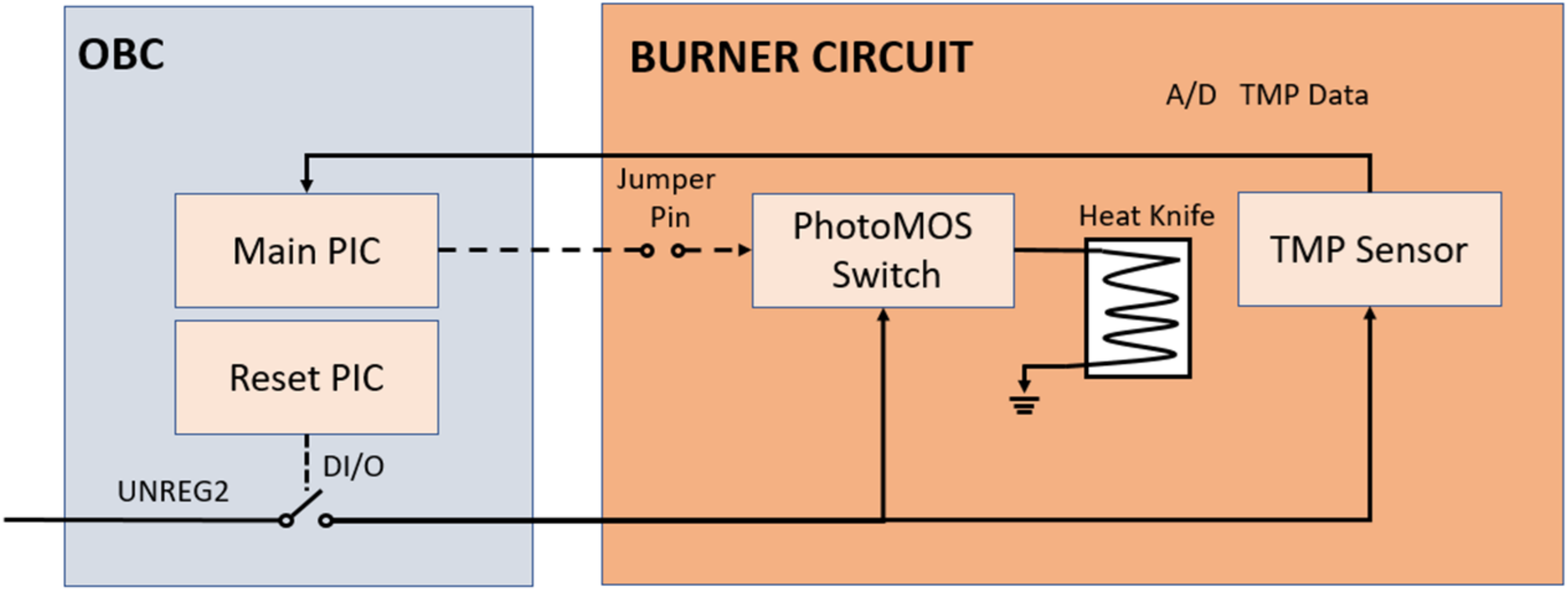

Ground Station

Credits : Yasir Abbas
Victor Schulz

Objectives for the Ground Station Sub-system

- Communicate with the MicroOrbiter-1 satellite
- Perform In-Orbit satellite tracking
- Send commands and receive telemetry from each of the satellites
    - HK Data (Housekeeping Data)
    - Mission or payload data

- Support communication missions of :
    - The LoRa 920 MHz mission
    - The LoRa 400 MHz mission

GS Sub-system Functions

- Send Uplink Command (UHF GMSK, 4800bps)
- Receive CW beacon (Morse code)
- Receive Telemetry (UHF GMSK, 4800bps)
- Communicate with the LoRa Mission (LoRa modulation, 73bps)
- Data processing
- Satellite Tracking (SGP4)

GROUND STATION UHF BLOCK DIAGRAM

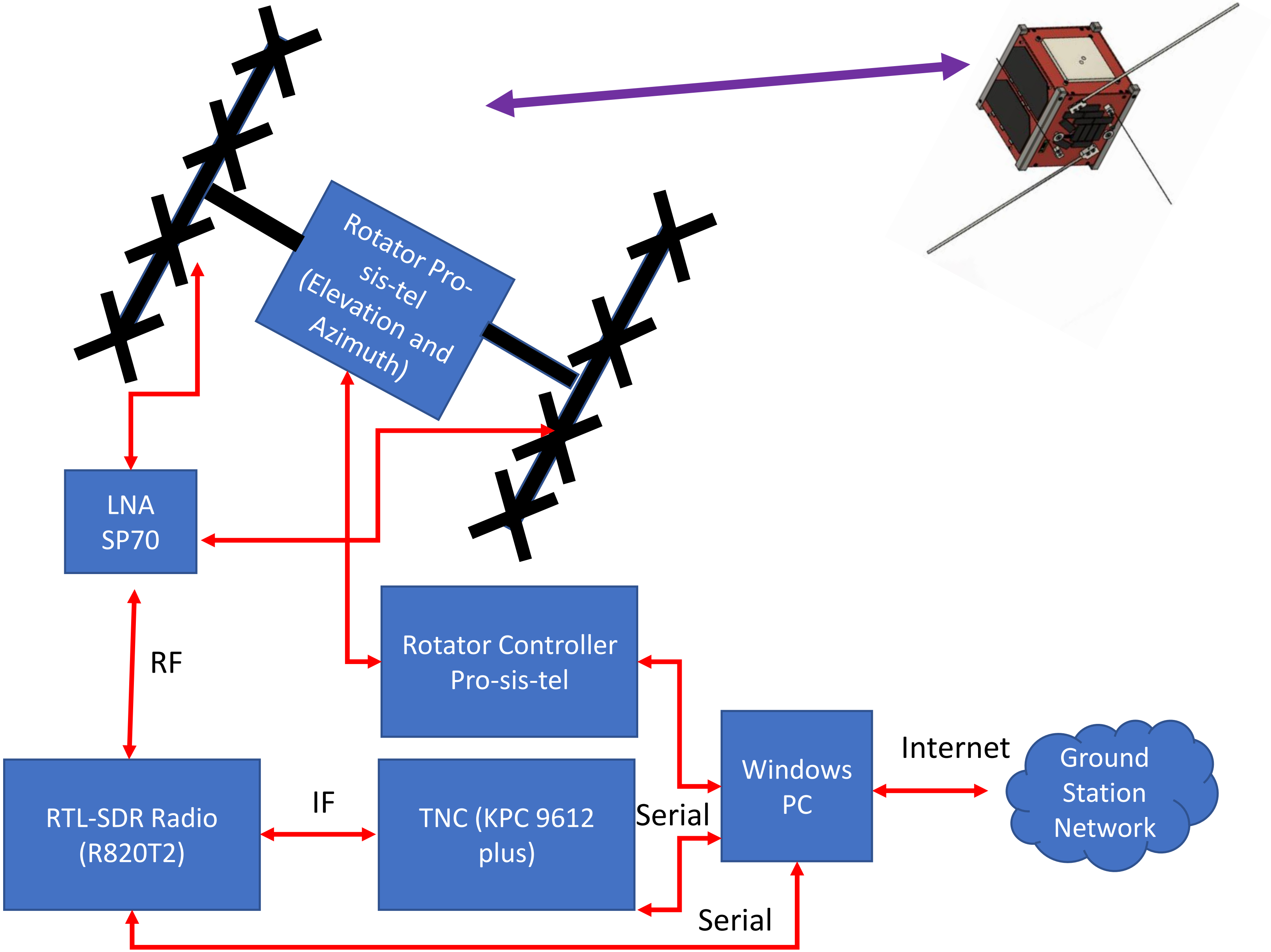

Ground Station Setup

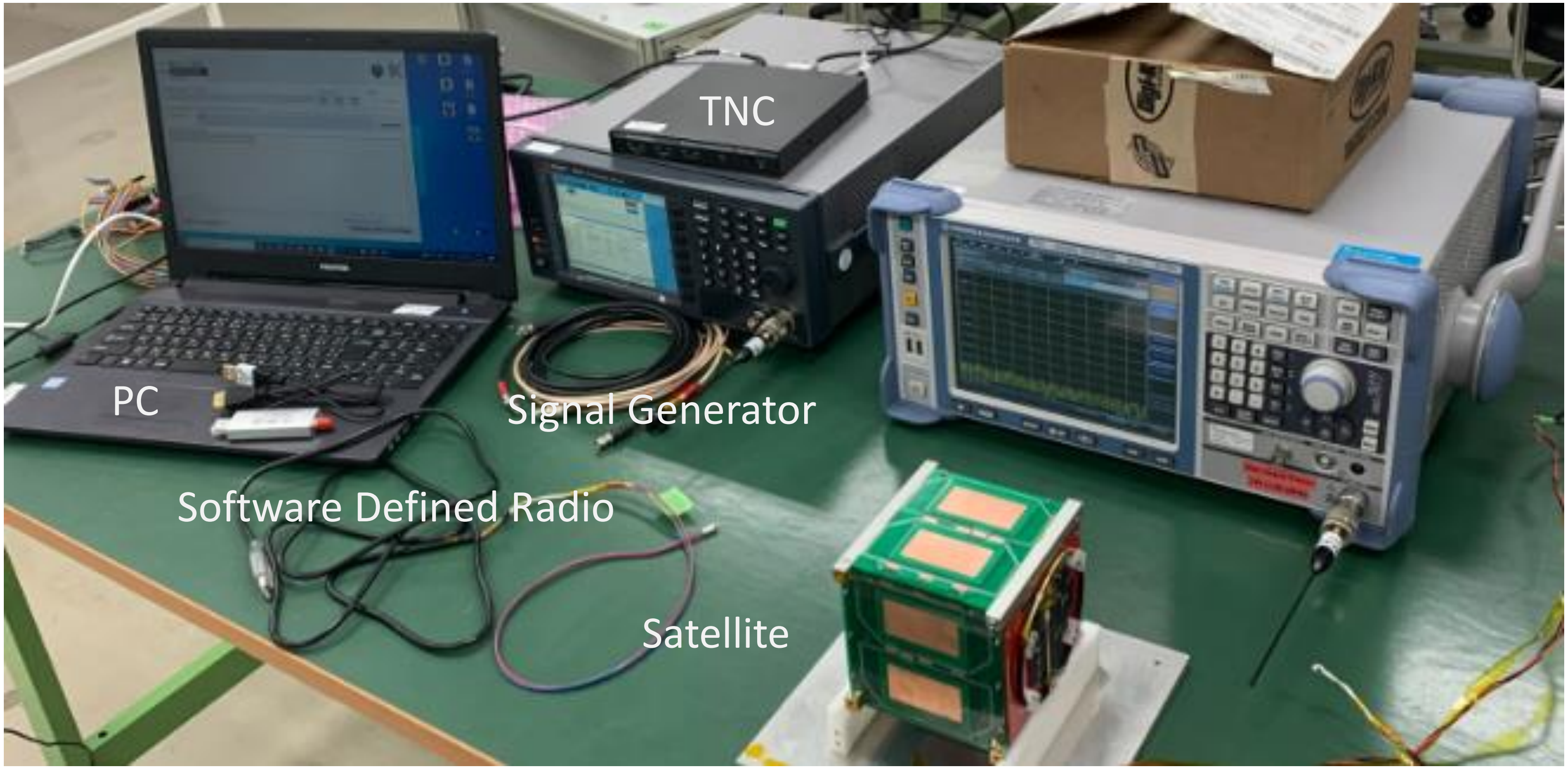

Operation Software

Basic Functions

- Command Uplink
- Telemetry Downlink

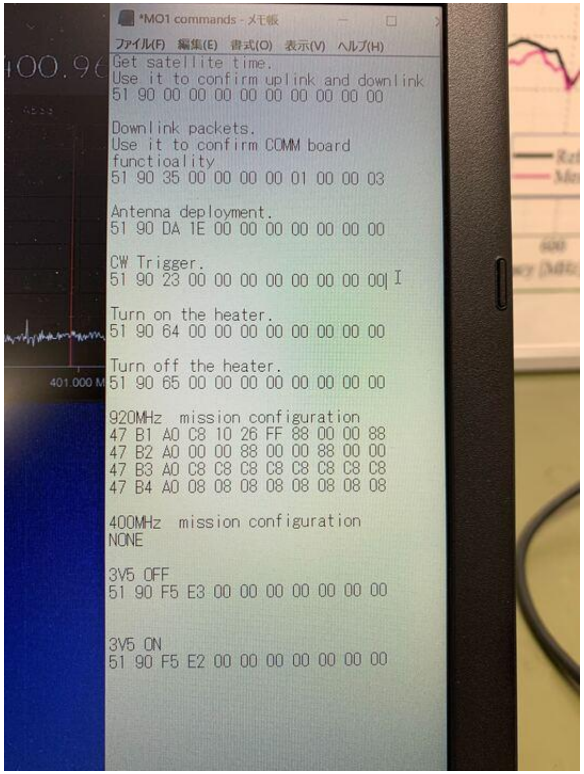

```
Get satellite time.
Use it to confirm uplink and downlink
51 90 00 00 00 00 00 00 00 00 00

Downlink packets.
Use it to confirm COMM board
functioality
51 90 35 00 00 00 00 01 00 00 03

Antenna deployment.
51 90 DA 1E 00 00 00 00 00 00 00

CW Trigger.
51 90 23 00 00 00 00 00 00 00 00

Turn on the heater.
51 90 64 00 00 00 00 00 00 00 00

Turn off the heater.
51 90 65 00 00 00 00 00 00 00 00

920MHz  mission configuration
47 B1 A0 C8 10 26 FF 88 00 00 88
47 B2 A0 00 00 88 00 00 88 00 00
47 B3 A0 C8 C8 C8 C8 C8 C8 C8 C8
47 B4 A0 08 08 08 08 08 08 08 08

400MHz  mission configuration
NONE

3V5 OFF
51 90 F5 E3 00 00 00 00 00 00 00


3V5 ON
51 90 F5 E2 00 00 00 00 00 00 00
```

Backplane Board

Credits : Mark Angelo Purio

Back Plane Board Function

- Connect subsystems and mission boards together
- Reduce difficulty in the assembly of a CubeSat
- Reduce usage of harnesses in a CubeSat

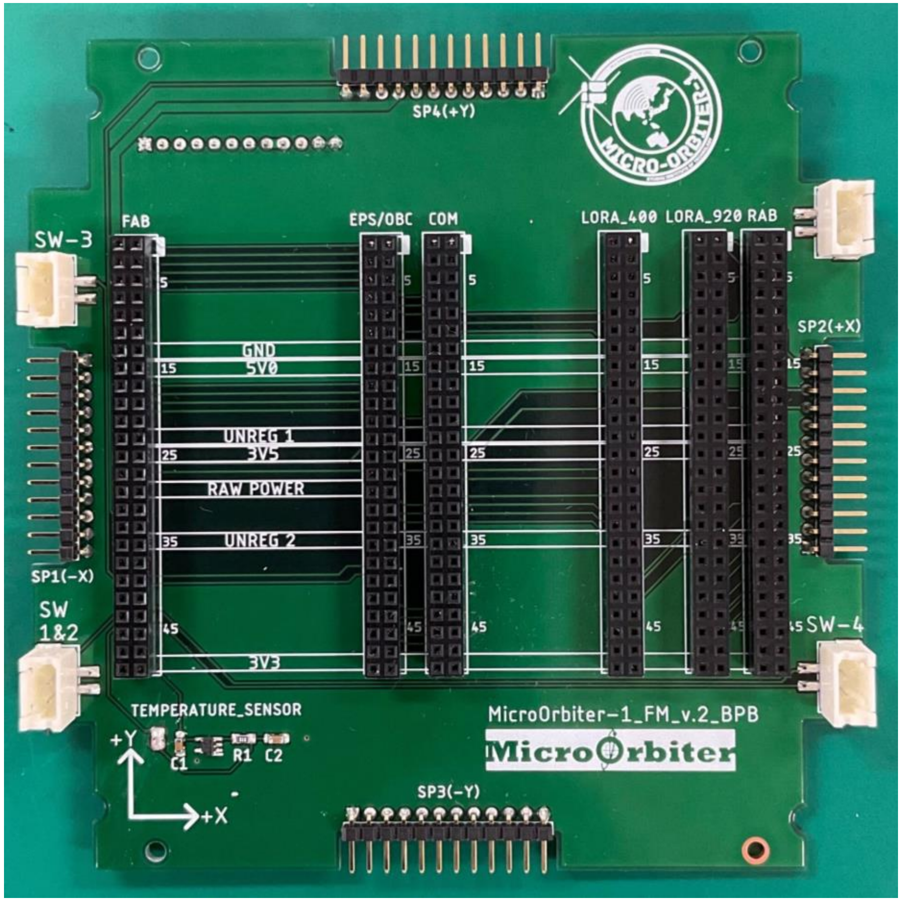

Block Diagram:
Back Plane Board

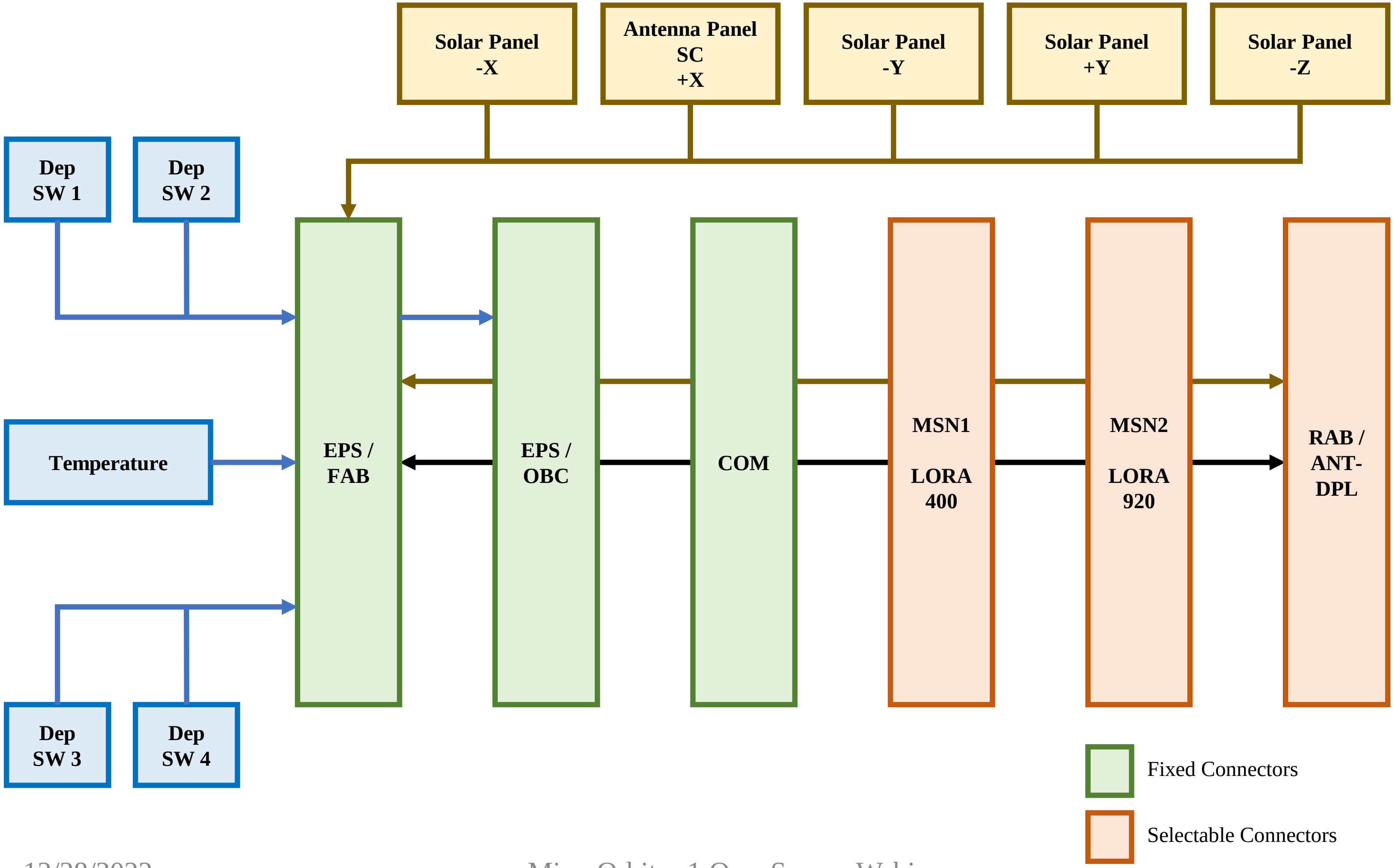

Difference from BIRDS-5 BPB

- ❑ CPLD is not implemented. The board is hardwired.
- ❑ The SUP_3V3_1 is replaced with SUP_3V3.
- ❑ The SUP_3V3_2 is replaced with SUP_3V5.
- ❑ Provision of SC_POWER to antenna panel(+X).

- ❑ Mission Board 1 employs LORA_400.
- ❑ Mission Board 2 employs LORA_920.
- ❑ Programming lines through RAB (USB lines).

EPS
(Electrical Power System)

By : Fahd Moumni
Hari Ram Shrestha

Victor Schulz

Pooja Lepcha

Background

1. Power Generation

   Generate Power from 4 units of Solar panels, each consists of two series-connected 30% efficiency Triple Junction Solar cells, during sunlight (60min) + 10 to 12 small solar cells (25% efficiency **in theory**).

2. Energy Storage

- Store the excess power into 3S2P Ni-MH batteries

3. Power Conditioning, Control and Distribution

- Convert the Battery Voltage to +3.5V levels
- Supply Unregulated line, +3.5V and +3.3V to Subsystems and OBC through ON/OFF controlled and overcurrent protected Lines

Block Diagram

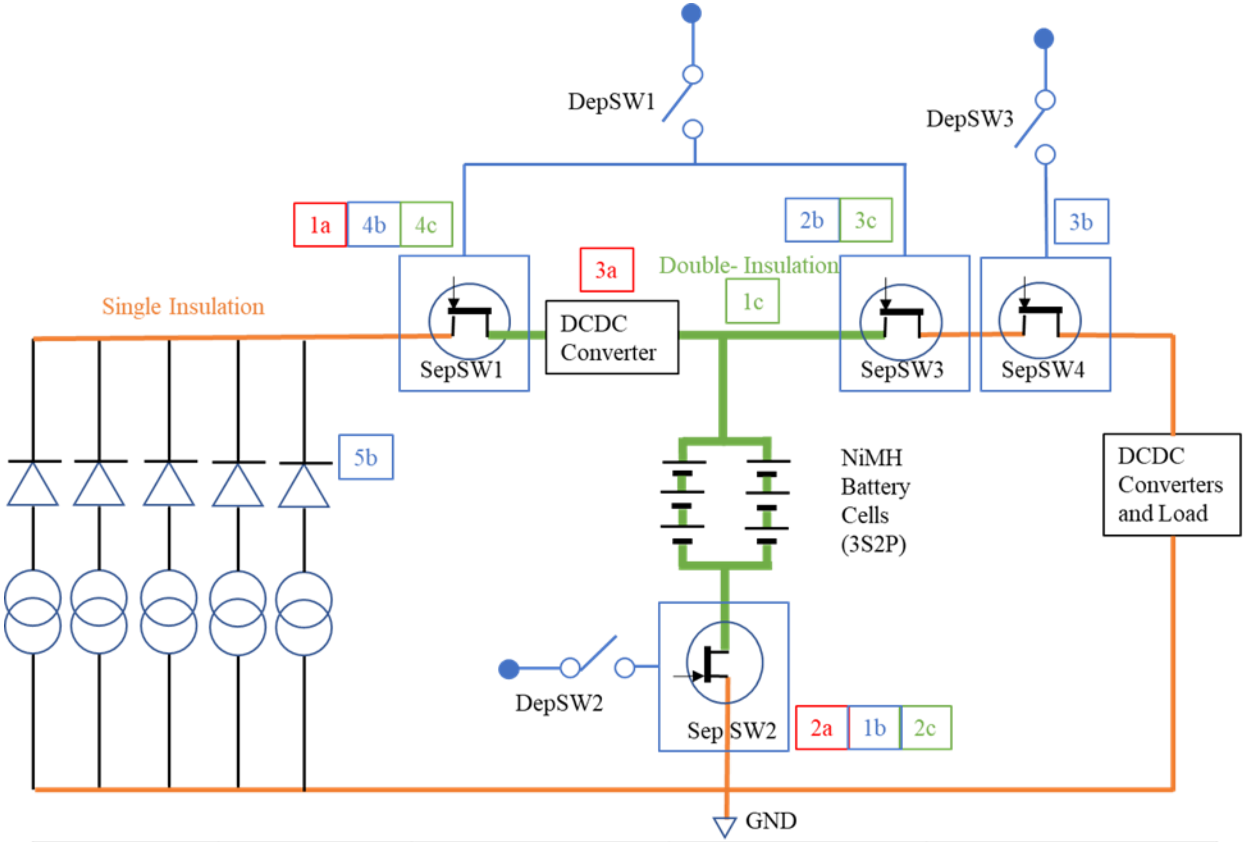

Hazard		Hazard Control #1	Hazard Control #2	Hazard Control #3
Overcharge		SepSW1[1a]	SepSW2[2a]	DCDC converter[3a]
Over discharge	Load side	SepSW2[1b]	SepSW3[2b]	SepSW4[3b]
	Solar cell side	SepSW2[1b]	SepSW1[4b]	Diode[5b]
External short	Load side	Proper Insulation[1c]	SepSW2[2c]	SepSW3[3c]
	Solar cell side			SepSW1[4c]

Power Line Diagram

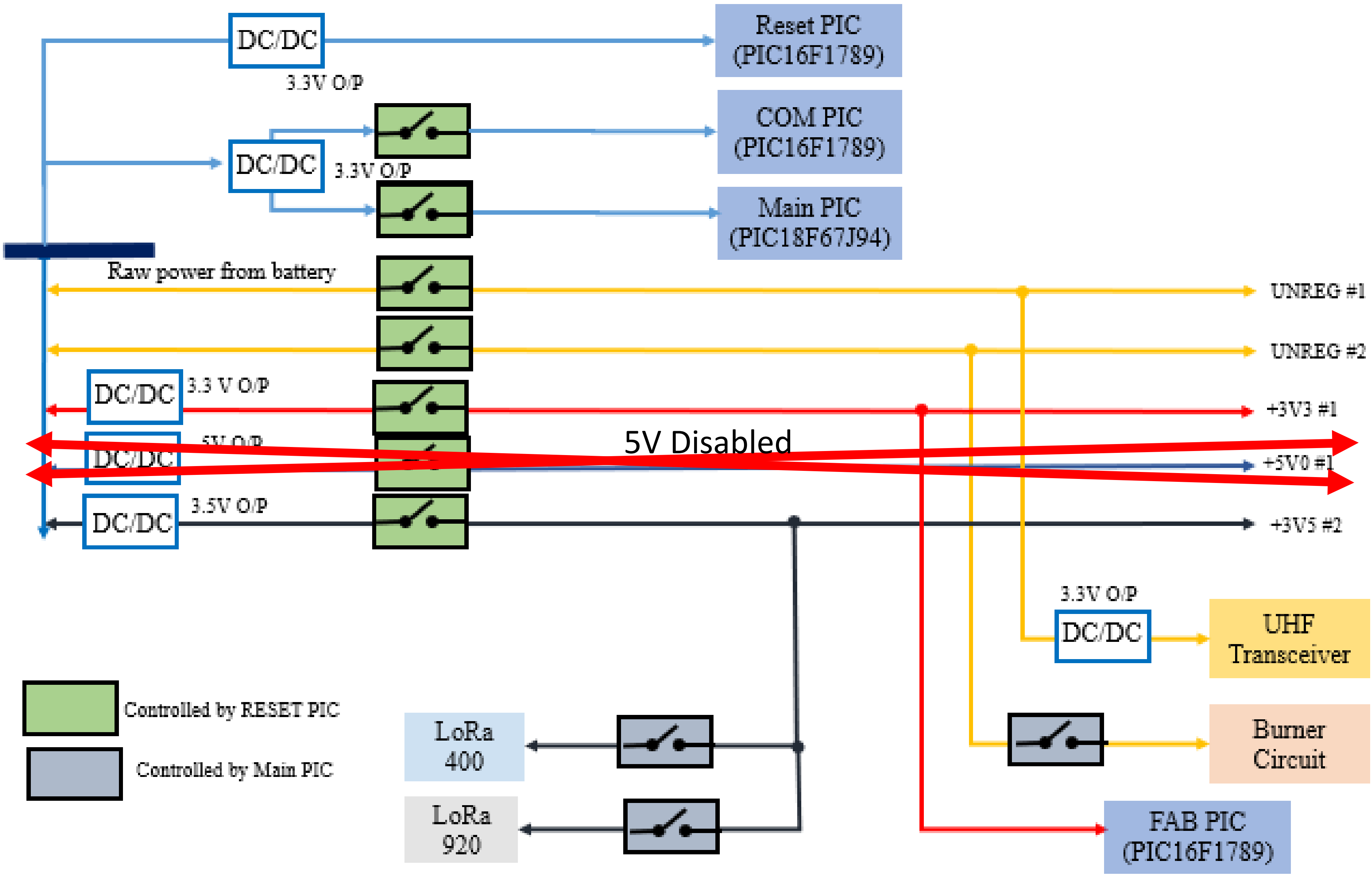

5V Disabled

Power Generation Simulation

3 panels generation

1.428 Wh

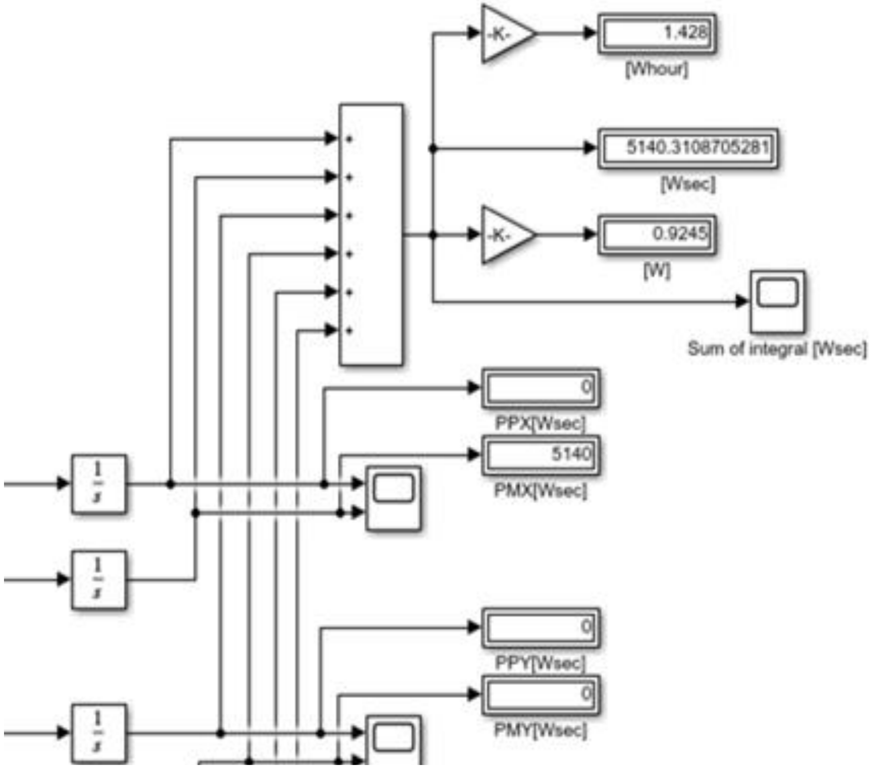

Power loss in blocking diodes
=0.125*3 = 0.375W*1h =0.375Wh

4 panels generation **1.887 Wh**

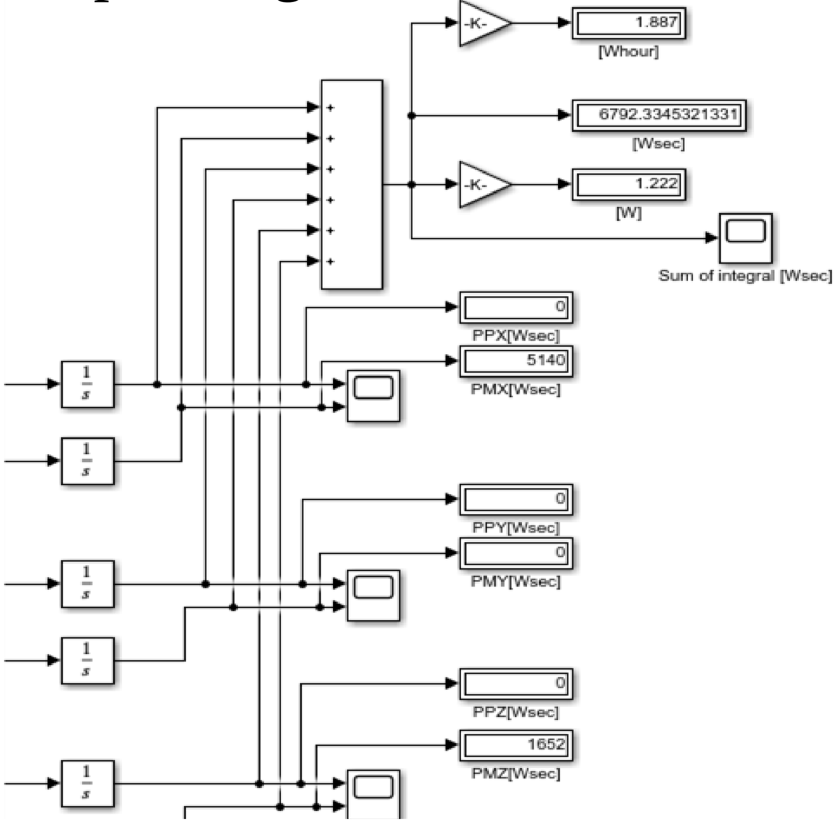

Power loss in blocking diodes
=0.125*4 = 0.500W*1h =0.500Wh

Power Budget

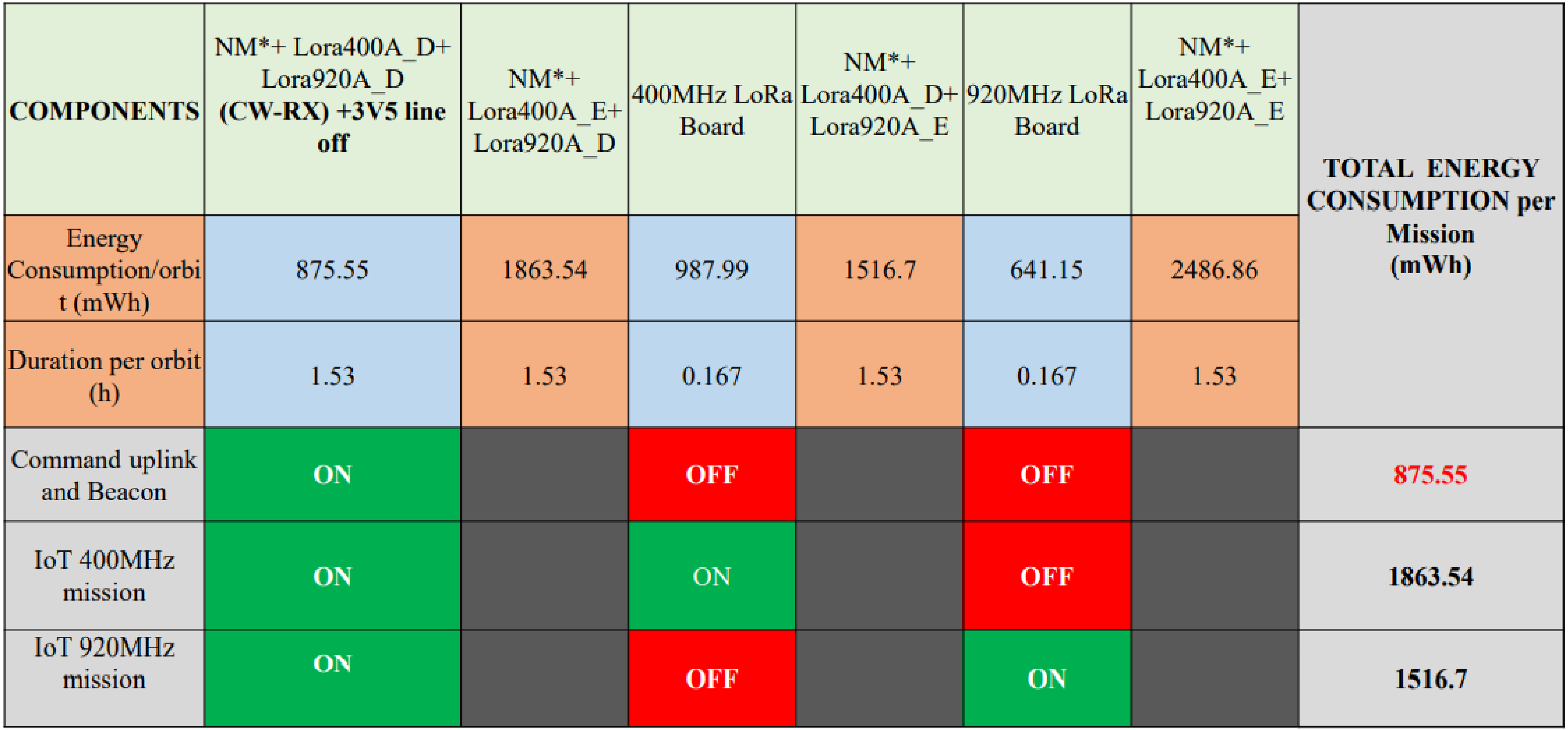

COMPONENTS	NM*+ Lora400A_D+ Lora920A_D **(CW-RX) +3V5 line off**	NM*+ Lora400A_E+ Lora920A_D	400MHz LoRa Board	NM*+ Lora400A_D+ Lora920A_E	920MHz LoRa Board	NM*+ Lora400A_E+ Lora920A_E	**TOTAL ENERGY CONSUMPTION per Mission (mWh)**
Energy Consumption/orbit (mWh)	875.55	1863.54	987.99	1516.7	641.15	2486.86	
Duration per orbit (h)	1.53	1.53	0.167	1.53	0.167	1.53	
Command uplink and Beacon	**ON**		**OFF**		**OFF**		**875.55**
IoT 400MHz mission	**ON**		ON		**OFF**		**1863.54**
IoT 920MHz mission	**ON**		**OFF**		**ON**		**1516.7**

About the Small Solar Cells

Test Conditions:

1. CW every 45 secs
2. Rotated the satellite on the RT at 1 degree per seconds
3. Adjusted the distance of the satellite stand from sun simulator until the output voltage of pyranometer in multi-meter reads 10 mV
4. Two Cooling fans were used.

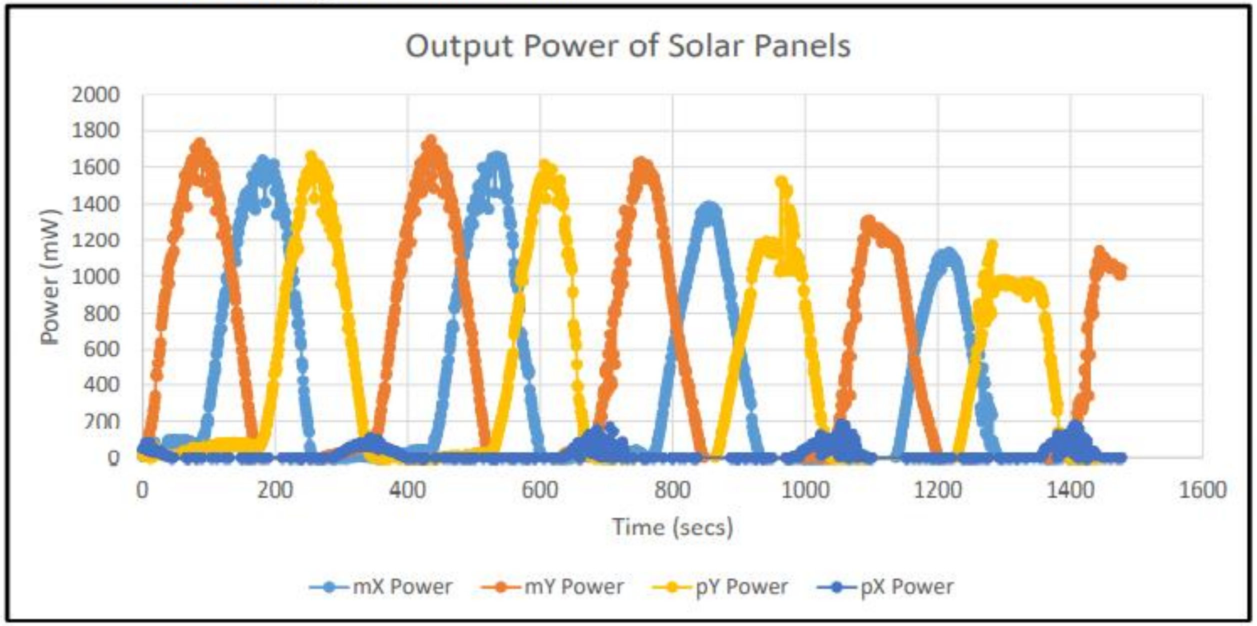

02-10-2022

Panel Power Output				
mX Power	**mY Power**	**mZ Power**	**pY Power**	**pX**
1.64 W	1.79 W	--	1.66 W	0.182 W

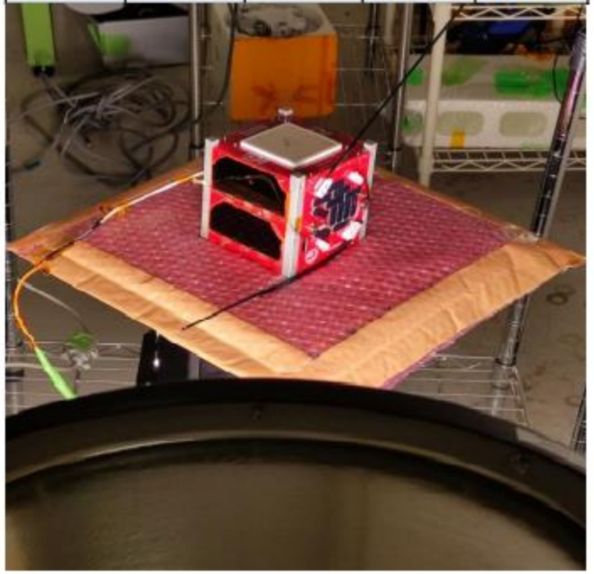

About the Small Solar Cells

Power and Current Graph of +X panel

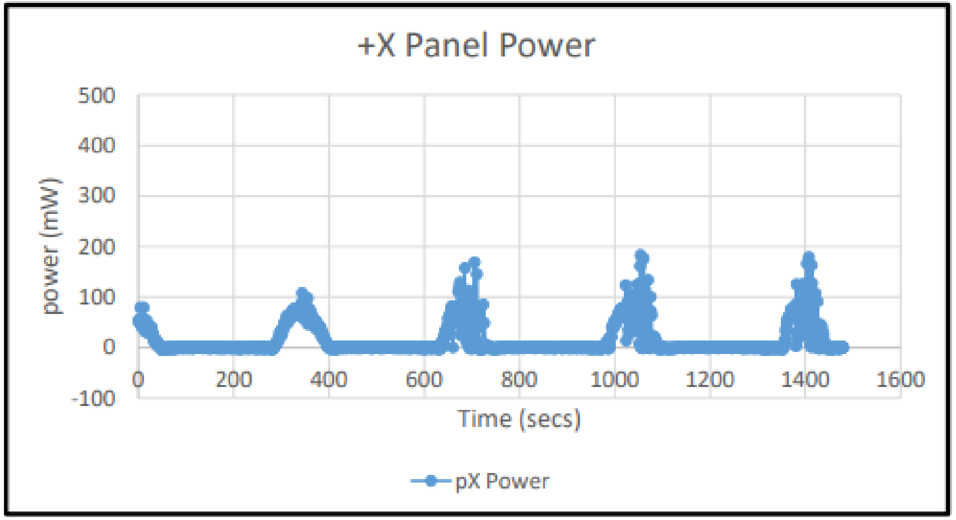

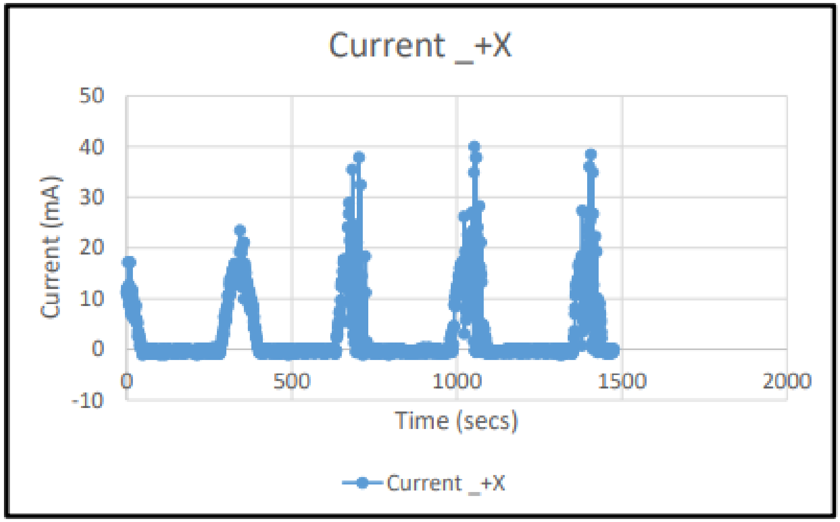

Maximum Power Generated: **182 mW**

From the datasheet:
Maximum Current of each cell: **6.3 mA**
Small solar cells used **= 12 cells**
maximum current : 12*6.3 = **75.6 mA**

From the Test:
maximum current : 39.9 mA which is about 52% of the total maximum current.

OBC
(On-Board-Computer)

Credits : Victor Schulz
Yasir Abbas
Pema Zangmo

Functions of OBC

1. Send Continuous Wave (CW) data to COMM
2. Analyze the Uplink commands
3. Execute missions using scheduled commands with tunable parameters
4. Send commands to Mission Boards and collect mission data
5. Monitor the satellite situation, manage and transmit housekeeping and mission data through COMM FM
6. Deploy the UHF and LoRa 400MHz antennas

Overview:

Microcontroller	Part No.	Function
Com PIC	PIC16F1789	Interface with the UHF transceiver.
Reset PIC	PIC16F1789	Fault recovery, HK data collection and control of EPS power lines.
Main PIC	PIC18F67J94	Mission control, data handling, command scheduling, antenna deployment.

OBC Block Diagram

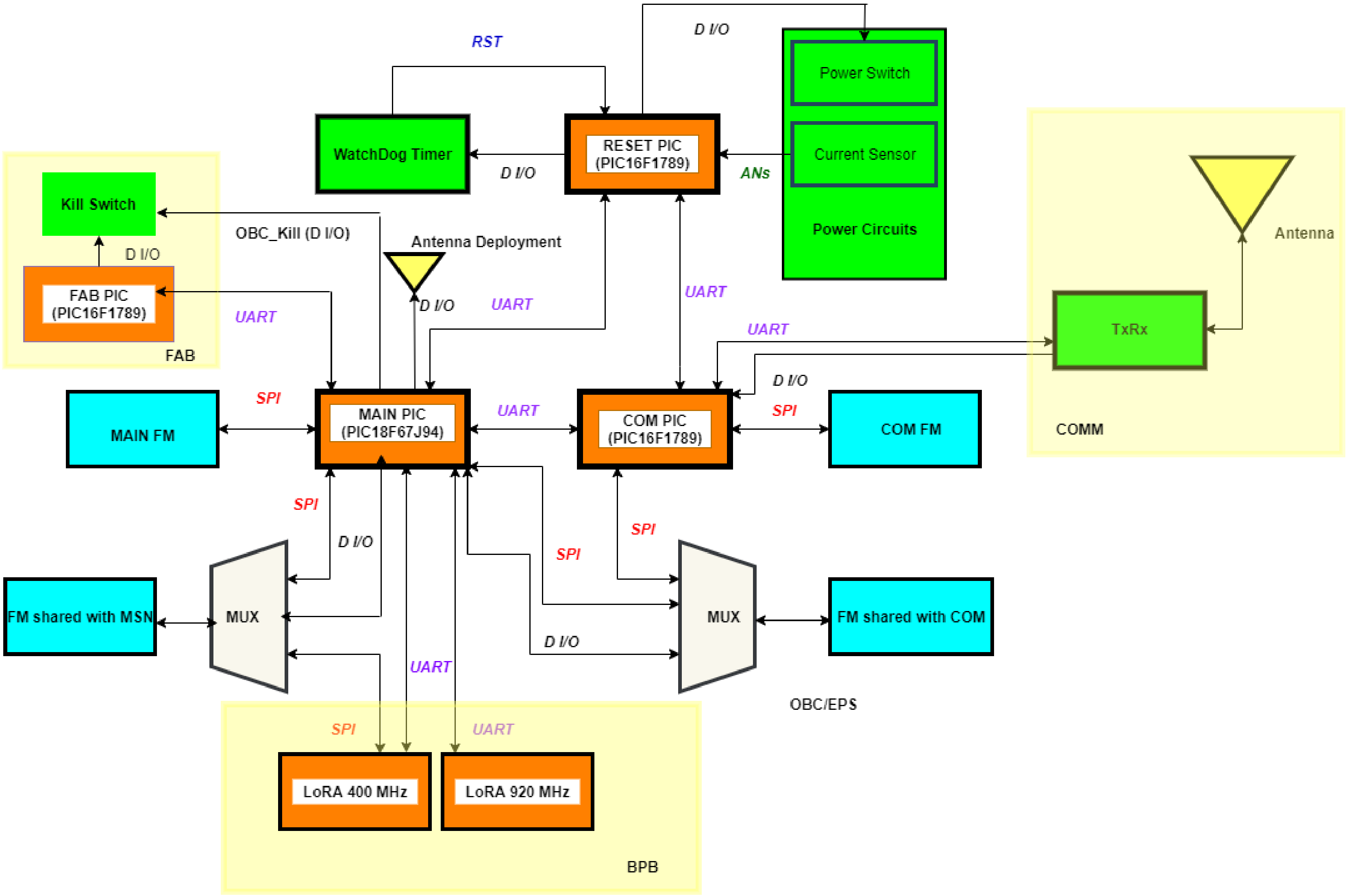

Difference in OBC/EPS board

1. Hardware: inherited from BIRDS-5
2. The 3V3#2 line was changed to 3V5 line to accommodate mission
3. The 5V line is disabled
4. Software: inherited from KITSUNE/CURTIS and adapted to run on standard BIRDS bus.

OBC execution flowchart

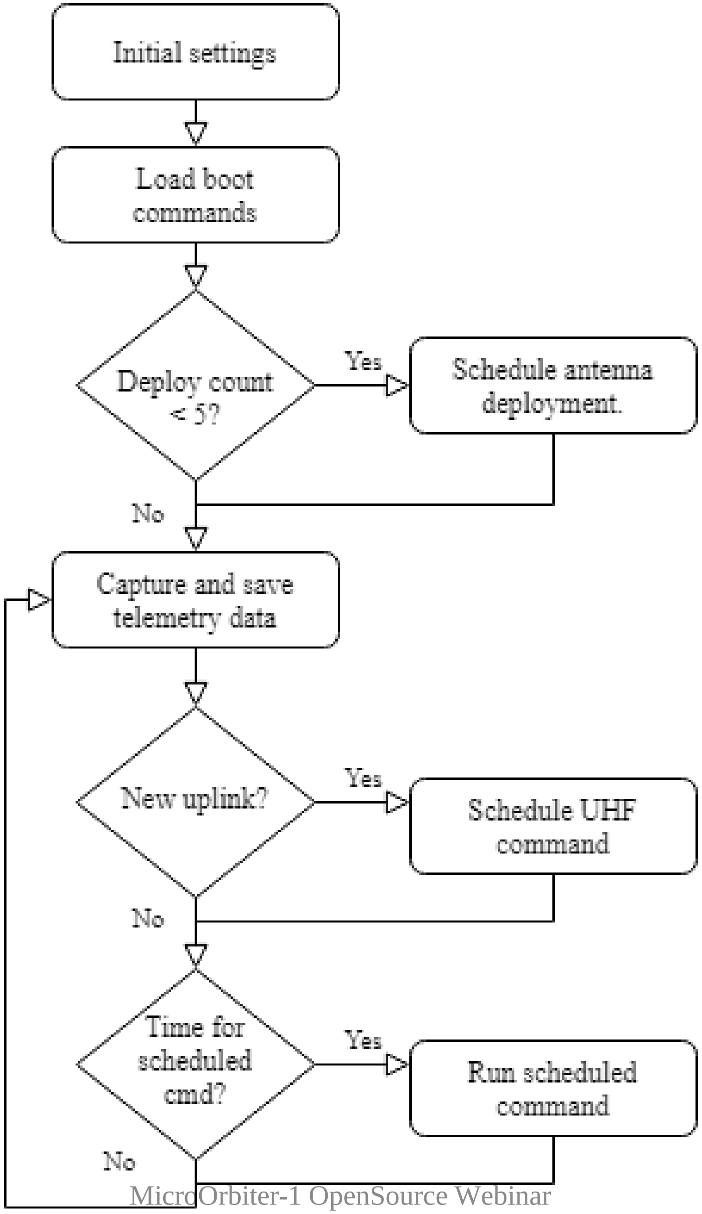

OBC Focused Block Diagram

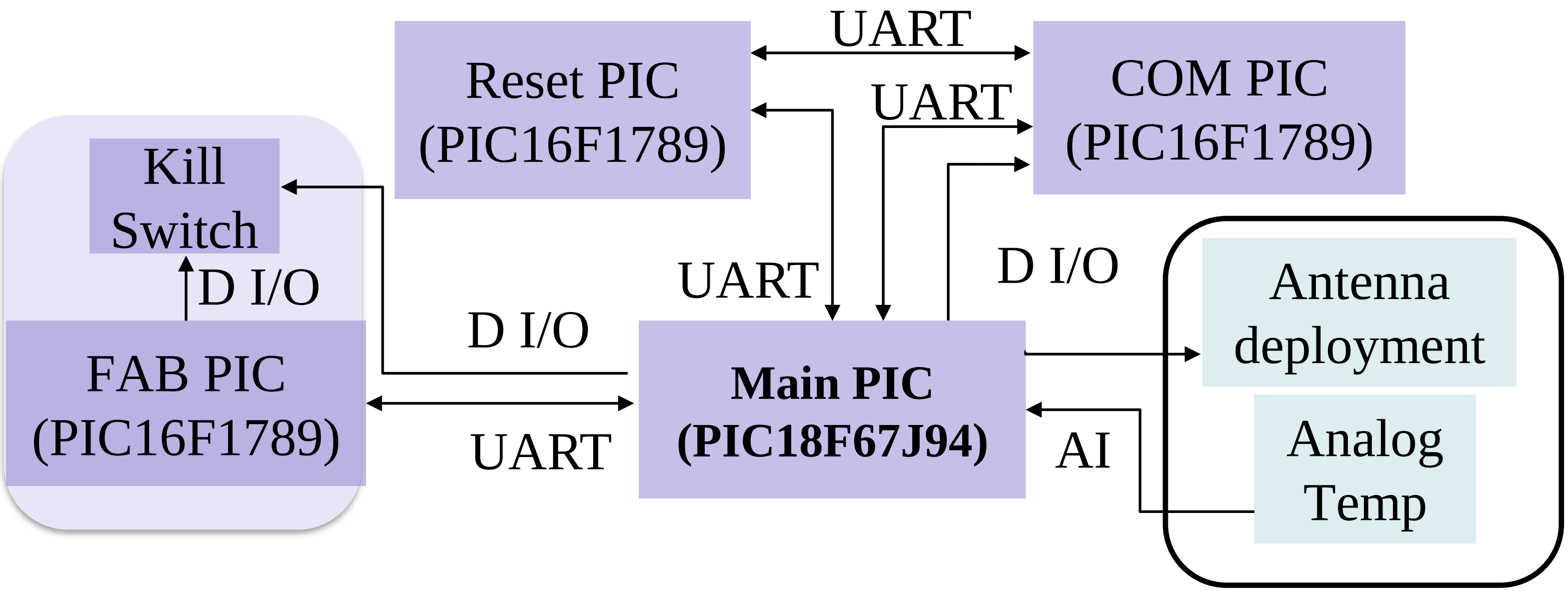

UART

Reset PIC
(PIC16F1789)

UART

COM PIC
(PIC16F1789)

Kill
Switch

D I/O

UART

D I/O

D I/O

Antenna
deployment

FAB PIC
(PIC16F1789)

Main PIC
(PIC18F67J94)

UART

AI

Analog
Temp

COMMS (Communications)

Credits : Yasir Abbas

Victor Schulz

Comms Subsystem Functions

- Receive uplink command from the ground station (GS), and send the received command to the onboard computer (OBC)
- Transmit mission or payload data via downlink to the GS.
- Transmit continuous wave (CW) beacon to the GS.

Ground Station Setup

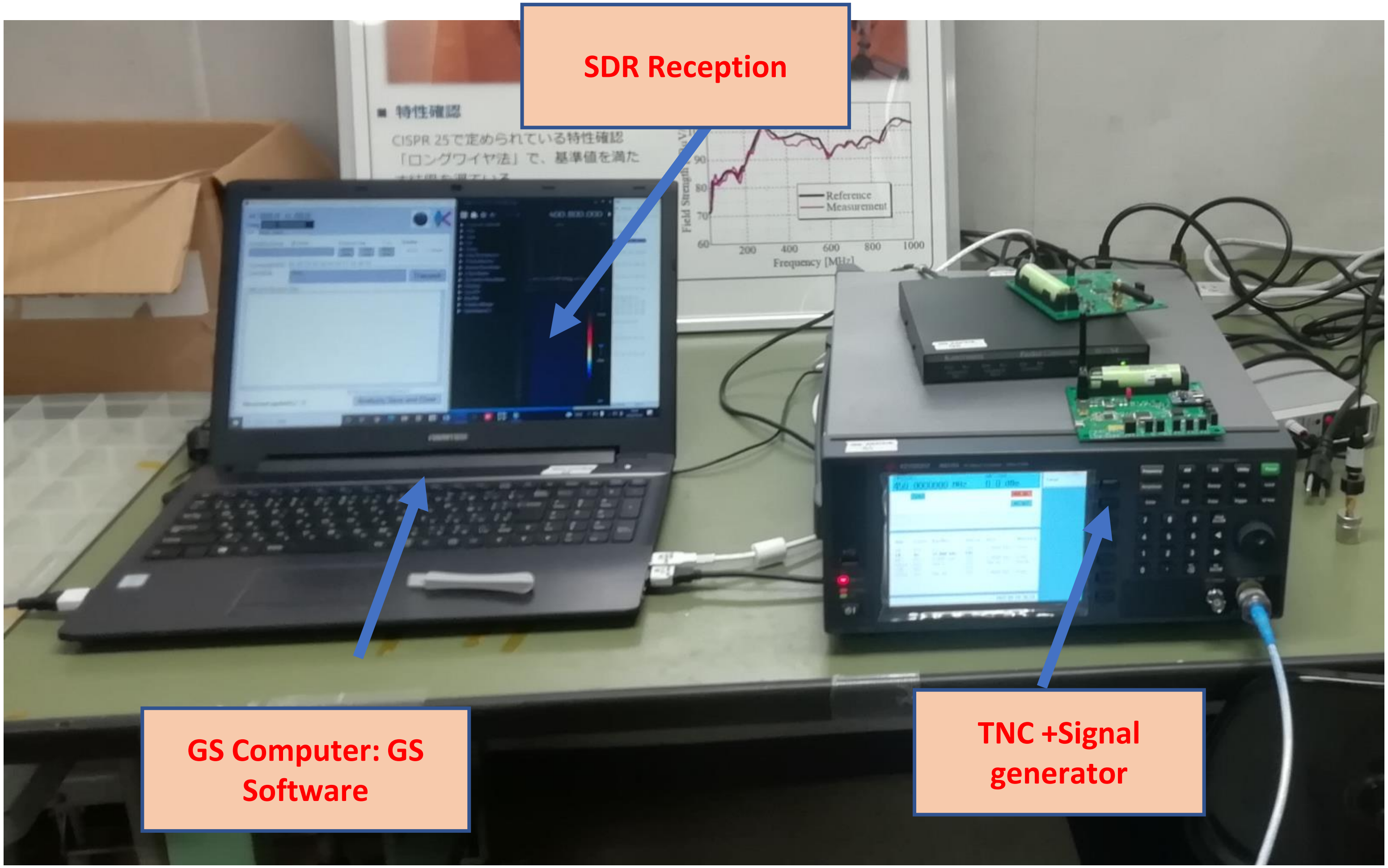

SDR Reception

GS Computer: GS Software

TNC +Signal generator

Block Diagram and Boards

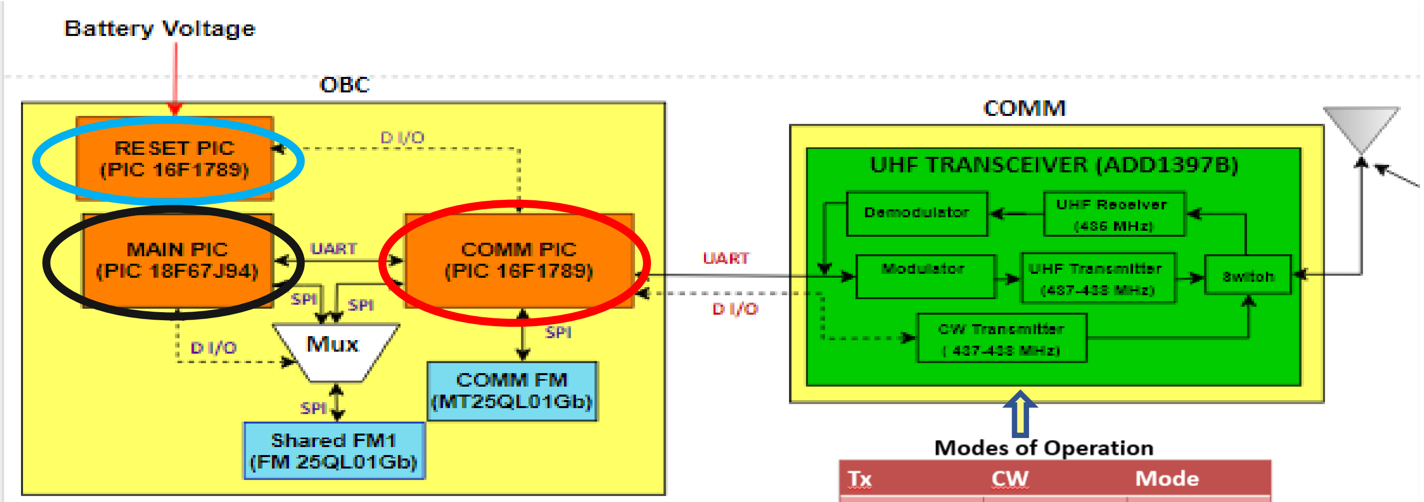

Modes of Operation

Tx	CW	Mode
0	0	GMSK Rx
1	0	GMSK Tx
0	1	CW mode

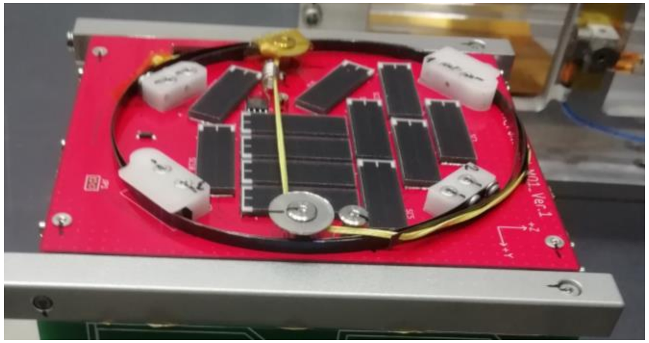

Antenna Board

Communication Links

1

Uplink (Receive Mode)	
Frequency	450 MHz
Bandwidth	8.5 kHz
Modulation	GMSK
Output Power	50W (47dBm)
Baud Rate	4.8 kbps

2

Downlink (Transmit Mode)	
Frequency	401 MHz
Bandwidth	8.5 kHz
Modulation	GMSK
Output Power	800 mW (29.0 dBm)
Baud Rate	4.8 kbps

3

Beacon (CW Mode)	
Frequency	401 MHz
Bandwidth	500 Hz
Modulation	CW Morse code
Output Power	100 mW (20dBm)
Baud Rate	20 wpm

Trans. Power Measurement

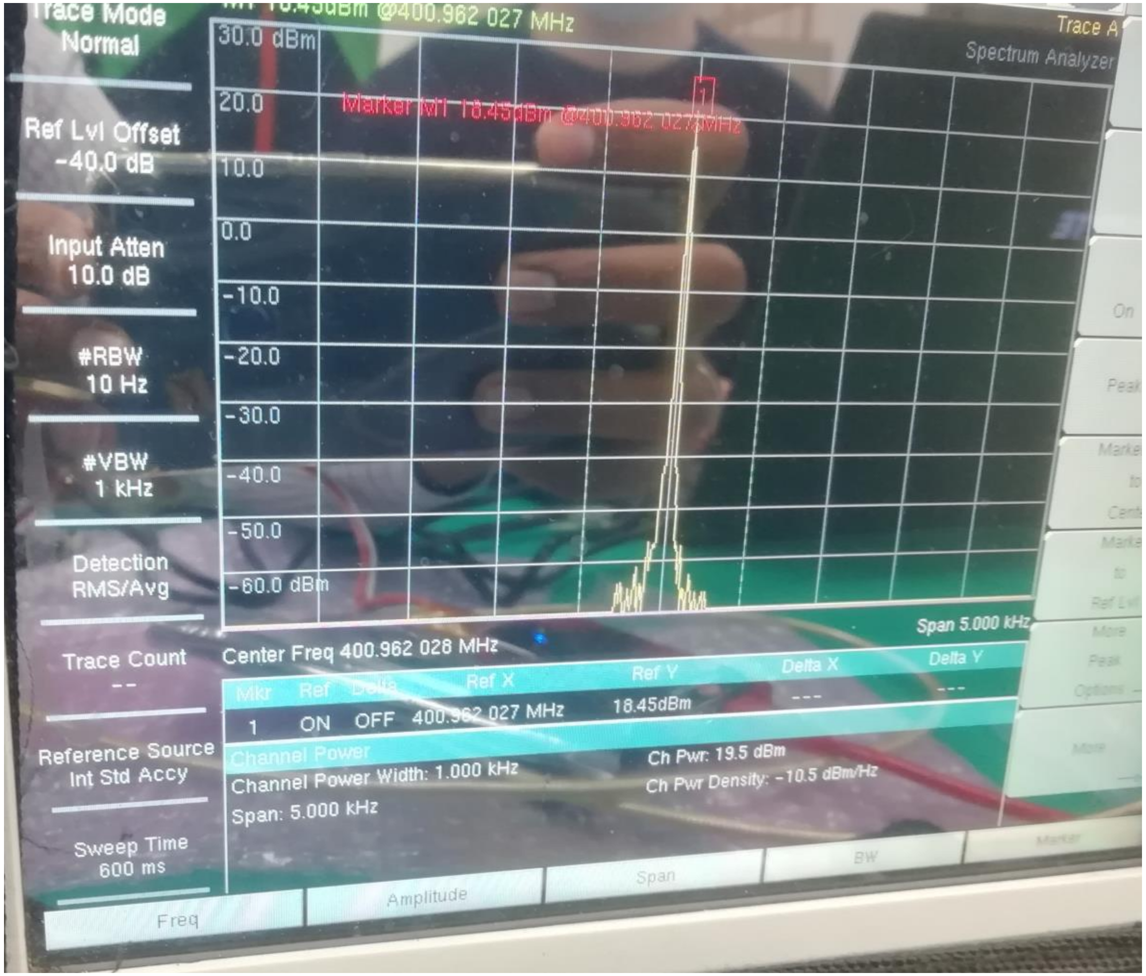

Trace Mode Normal

Ref Lvl Offset -40.0 dB

Input Atten 10.0 dB

#RBW 10 Hz

#VBW 1 kHz

Detection RMS/Avg

Trace Count --

Reference Source Int Std Accy

Sweep Time 600 ms

Center Freq 400.962 028 MHz

Mkr	Ref	Delta	Ref X	Ref Y	Delta X	Delta Y
1	ON	OFF	400.962 027 MHz	18.45dBm	---	---

Channel Power

Channel Power Width: 1.000 kHz

Span: 5.000 kHz

Ch Pwr: 19.5 dBm

Ch Pwr Density: -10.5 dBm/Hz

Measured Power = 18.45 dBm + 10(Atten.(dB))=28.45 dBm

UHF transceiver specified transmit output power = 800 mW (29 dBm)

Sensitivity Test Results

BIRDS	**Sensitivity (dBm)**
BIRDS-3 FM-B	-96
BIRDS-4 EM	-101
BIRDS-5 EM	-99
MO-1 EM	-99

Thank you for your attention

Acknowledgements to BIRDS-5, CURTIS, KITSUNE, BIRDS-4 and Spatium II teams